




BELLEVUE
ARCHITECTURAL

New product:

- BISA240CRP for doors up to 150Kg

Justor

JUSTOR SPRING HINGES

aluminium, stainless steel, zinc plated and welding hinges
100% made in Spain

+61 3 9571 5666
www.bellevuearch.com.au
info@bellevuearch.com.au
instagram.com/
bellevue_architecutural

About Bellevue and Justor

For over 30 years, the name Bellevue Architectural (formerly Bellevue Imports) is synonymous with providing products that create visual attraction and differentiation without compromising quality, design or affordability. Bellevue's products have been used all over Australia and New Zealand from small projects through to large (project pricing available). They are designed and manufactured by people from within the design industry, people who truly believe that design and quality is an integral part of creating something special and unique.

Today Bellevue is proud to present the Justor range of spring hinges. Used in a variety of applications, the Justor spring hinge is ideal for doors that need to return to a closed or central position without assistance.

Aesthetically pleasing to the eye, Justor's spring hinges have won international design awards and are used worldwide. An example of their usage within Australia has been doors leading to pools, WC doors within hospitals and restaurants, front doors for apartments and houses, kitchen doors within restaurants, IT communications room doors, gates, office & perimeter doors, just to name a few.

Based in Spain & with over 50 years of experience, Justor is considered a world leader in innovation, design & quality. All Justor products come with a 2-year manufacturer's guarantee. No other spring hinge of this type can compete with Justor's strength, durability and longevity.



Justor factory in Spain

The complete Justor spring hinge range is available Australia and New Zealand wide from a range of resellers. Delivery is typically overnight to most locations. Bellevue welcomes any organisation interested in becoming resellers of the Justor range as well as any other products available from Bellevue Architectural. For a complete list of resellers, please look at our web site at www.bellevuearchitectural.com.au or alternatively call Bellevue Architectural on +61 3 9571 5666 to discuss your requirements.





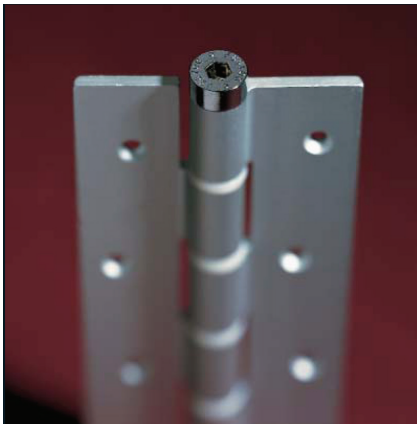

Justor by Bellevue
Smart architectural products

Product index

Single action spring hinges (doors that swing in one direction)

BISA120 single action spring hinge - Max 30Kg @ 100cm Pg. 14

BISA180 single action spring hinge - Max 60Kg @ 100cm Pg. 16

BISA240 single action spring hinge - Max 150Kg @ 100cm NEW Pg. 18

BIPM120 lift-off spring hinge - Max 30Kg @ 100cm Pg. 20

BIST150 interleaf single action spring hinge - Max 60Kg @ 100cm Pg. 22

Double action spring hinges (doors that swing in both directions)

BIDA120W & 180W double action **wall mounted** spring hinge - Max 55Kg @ 100cm Pg. 32

BIDA120 double action spring hinge - Max 35Kg @ 100cm Pg. 34

BIDA180 double action spring hinge - Max 55Kg @ 100cm Pg. 36

Spring hinges for lightweight (doors that swing in single direction)

BIMZ single action fly screen spring hinge - Max 5kg @ 100cm Pg. 38

BIMP single action spring hinge for existing doors - Up to 40kg Pg. 40

BIMB single action spring arm closer - Max 40kg @ 85cm Pg. 42

Heavy duty spring hinges (gates and steel frames)

Retaining brake range - anti door slammer up to 100kg Pg. 44

BIPG range of welding hinges for doors and gates - Max 250Kg @ 100cm Pg. 46

BIPP push flap welding hinge for doors and gates - Max 80Kg @ 100cm Pg. 48

Technical infomation

Technical specifications Pg. 50


VINCA
BARCELONA
5 Tm


MAGATZEM
38











All of Justor's spring hinges are designed and made to exacting standards exclusively in Justors factory in Spain to ensure reliable, smooth automatic closing of all types of doors, windows, gates, sliding doors etc.

Designed and made in aluminium, stainless steel, iron and/or plastic, Justor's wide range of products offer solutions for single action as well as double action doors (swing doors). With a distinguished spring system consisting of a set of laminated blades working by torsion, the lifespan of these blades can be in-excess of 500,000 opening and closing cycles. The strength/ closing force of the spring is adjustable and the loading capacity of these products can be up to 250kg.

Common considerations for all Justor spring hinges

All Justor hinges are available in multiple finishes and can be supplied in sprung or unsprung versions.


AS - Anodized silver


AG - Anodized gold

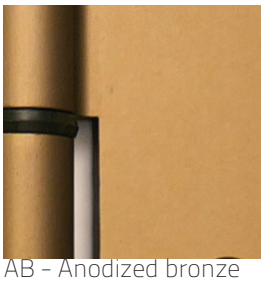
AB - Anodized bronze


WH - PC white


BLK - Anodized black

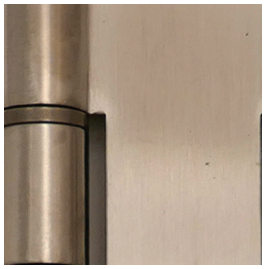
SS - AISI 304

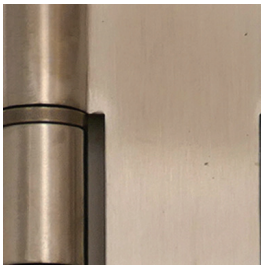
S3 - AISI 316

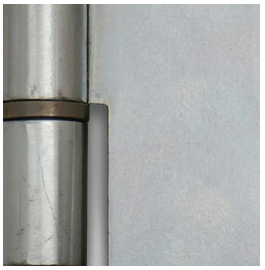
ZP - Zinc-plated

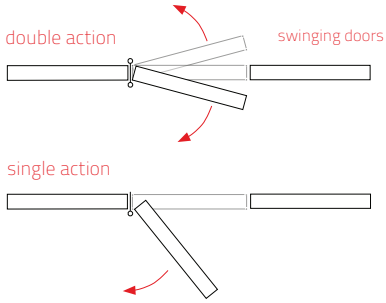

Installation positions for 2 and 3 hinges

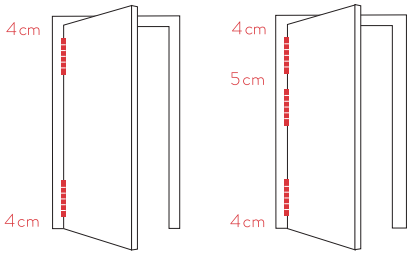

The Justor spring hinge system is founded on a set of laminated blades that work by torsion. It's this torsion action that underpins the high performance of the Justor spring hinge range. Unlike a coil spring, torsion blades don't stretch over time or loose their ability to bounce back when under strain.

The blades are constructed out of either iron or stainless steel. Due to the high quality of materials used and the blade construction process, the springs have a high resistance level to breakage, deformation and its optimum elasticity makes a big difference when comparing the Justor range of spring hinges and a normal spring hinge.

Justor Spring Hinges come with a 2-year manufactures guarantee. As a result of Justor's exact manufacturing standards, Justor spring hinges are considered to be the best in the spring hinge market. All Justor spring hinges operate and are adjusted the same way making it easy to install and use.

maintenance

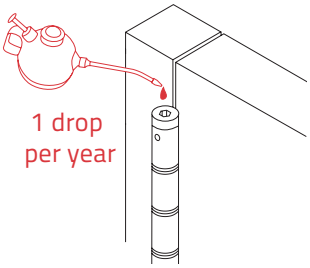

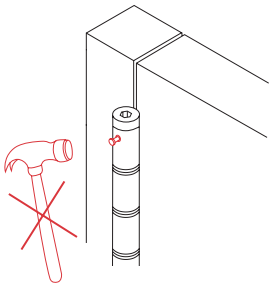

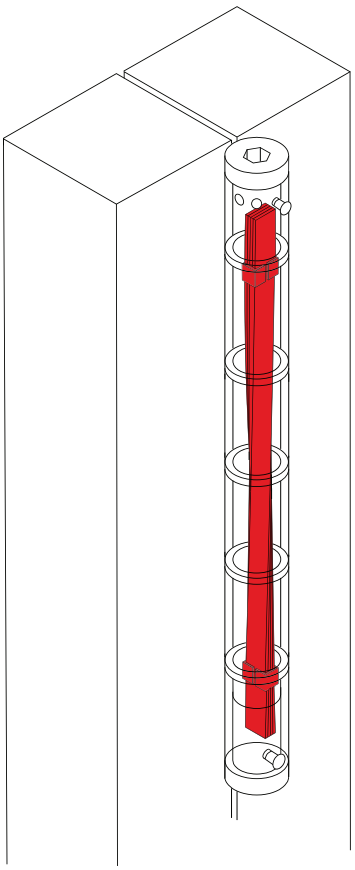

simple adjustment

(maximum number of positions vary depending on the model)

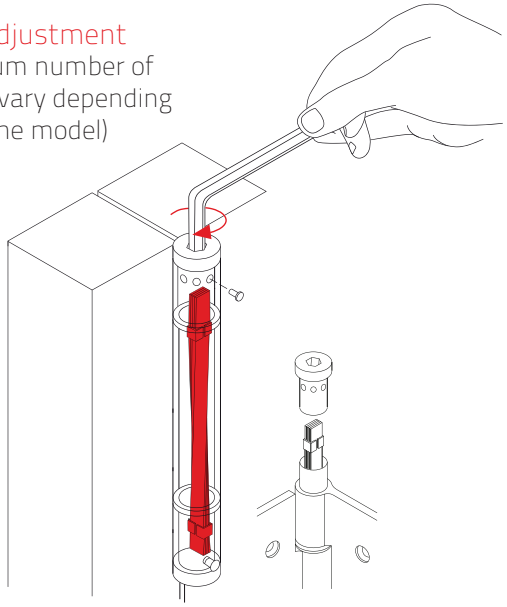

tension

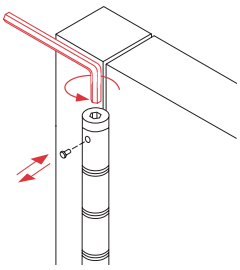

cap



Solutions for all types of doors

Manufactured in Spain since 1946, Justor spring hinges are sold in over 70 countries worldwide. The reason for such reach and success is due to Justor creating products that not only meet but exceed customer exceptions. The Justor customers come from a diverse range of industries such as metal, wood, food, health, aeronautics, boating, hospitality, building etc. and can be found in all types of environments including indoor and outdoor.







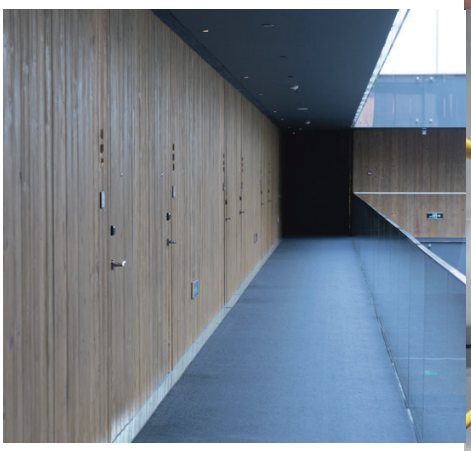







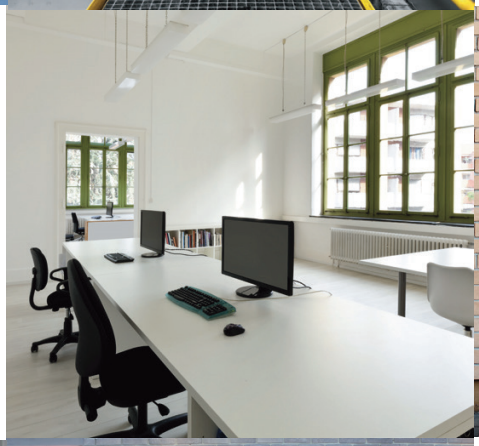







Justor



BISA120AG - Single action (anodized gold)



BISA180SS - Single action (stainless steel 304)



BIPM120AG - Lift-off (anodized gold)



BISA120SS - Single action (stainless steel 304)





Single action hinges used in retail and residential environments.

Justor hinges such as BISA120 and BISA180 are being used in all sorts of locations within the retail market due to their functionality and aesthetic appearance. Architecturally designed to fit into retail environments and not detract from the visual appeal combined with their durability makes the Justor range ideal for high levels of retail use.

Residentially Justor hinges are being used for front doors, bathroom doors (lift-off versions available) bedroom, laundry and pool doors. All Justor hinges provide a practical, functional value-add to a home.









Single action hinges used in industrial environments.

Justor hinges are ideal for the industrial market due to their construction material and design. Available in 316 Marine Grade stainless steel, Justor hinges are used extensively in the marine industry worldwide. Commercial shipping through to pleasure craft, whenever a door needs to stay closed. The durability of the 316 grade stainless provides long term reliability and cost effectiveness.

Models like the BISA180S3, BISA180SS and BIPG240 welding hinge are being used within the industrial market due to the sheer strength of the hinge itself. With a closing capacity of up to 250Kg, the Justor spring hinge range is versatile and practical.





Spring hinge BISA120 functional data
Aluminium and 304 stainless steel

Anatomy of a small single action spring hinge:

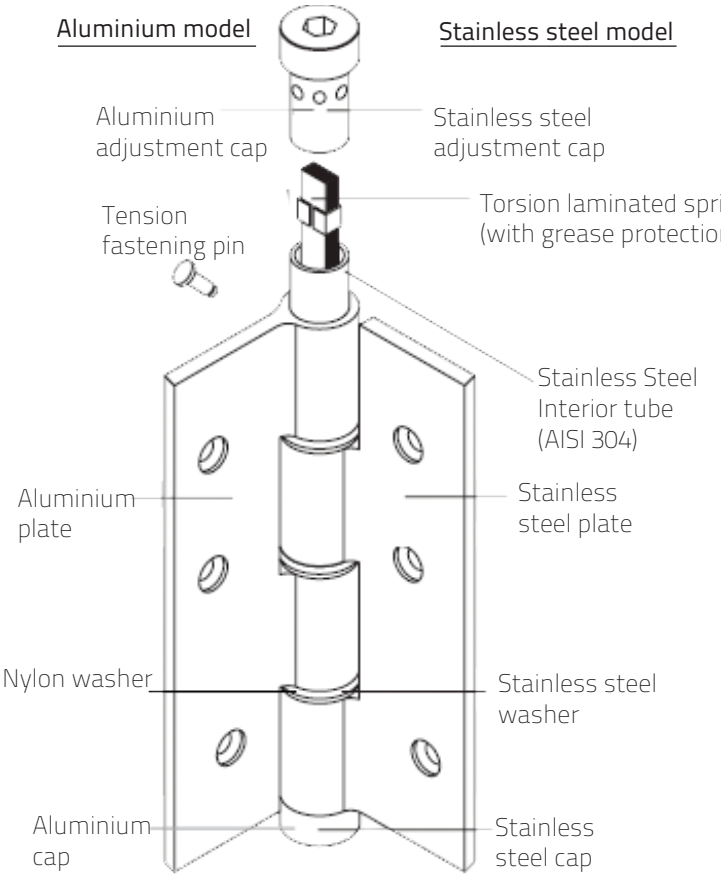

BISA120 adjustment instructions:

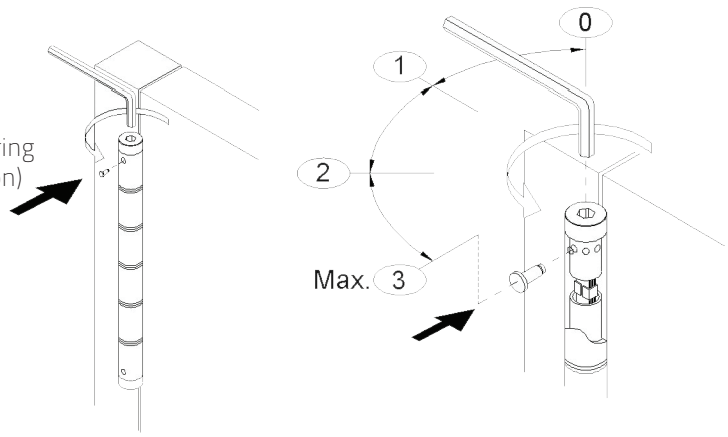

Where the BISA120 can be used

- Commercial environments
- Residential environments
- Apartment buildings
- Restaurant kitchens
- Hotels of all sizes
- Industrial estates
- Hospitals
- Gates
- Retail doors
- Front doors
- Office doors
- WC type doors
- Perimeter doors
- Doors leading to pools

Dimensional information:

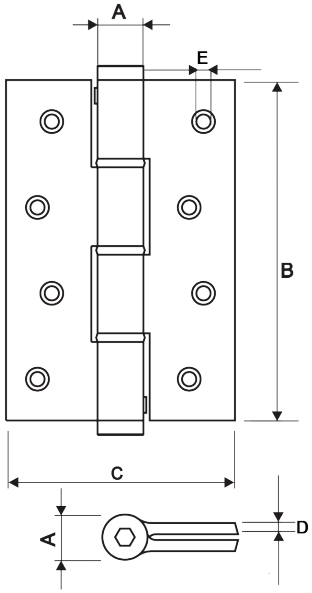

	BISA120 Aluminium	BISA120 SS & ZP
A	Ø16	Ø16
B	120	120
C	80	80
D	4	2.5
E	Ø5.3	Ø5.3

(All dimensions in mm)

Number of hinges required per door based on door weight & width:

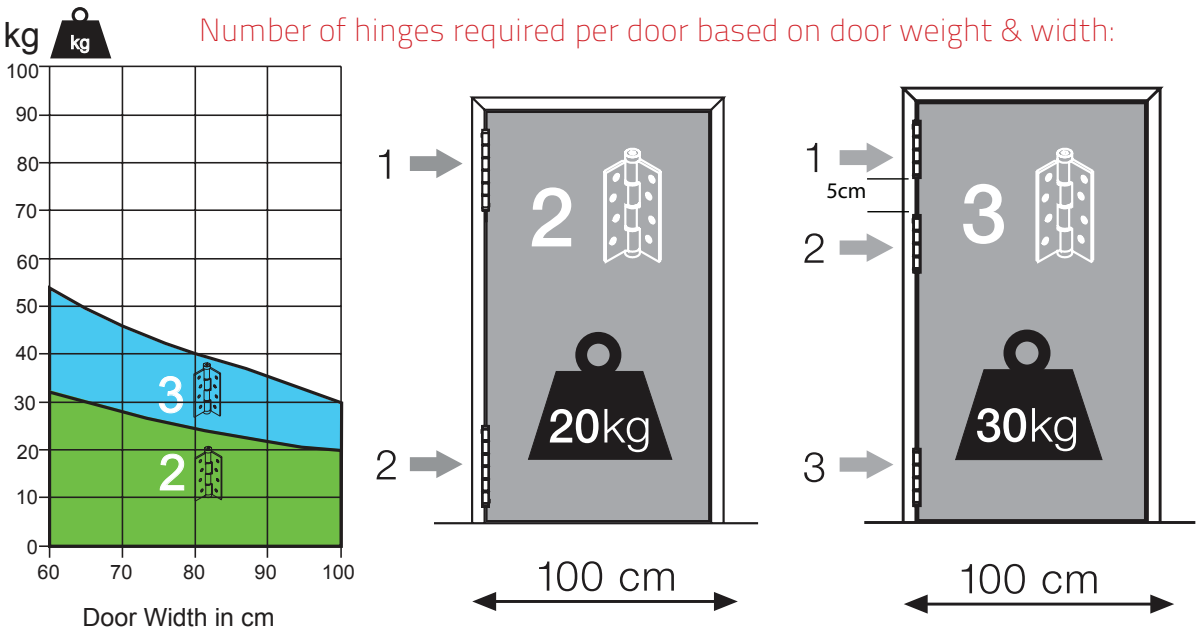

Spring hinge BISA120 functional data
Aluminium & 304 stainless steel

The BISA120 small single action spring hinge is an extension of the enormously popular larger BISA180. The BISA120 is the same in all respects to the BISA180, but smaller. It's been designed to provide the same functionality as the BISA180 but on smaller, lighter doors.

The BISA120 has been designed to carry and self close doors that weigh up to 35kg (based on 900mm wide door), and is ideal for internal or external applications; wherever a door needs to return to a closed position without assistance. The BISA120 single action spring hinge is designed to automatically close a door with a subtle visual appearance. It is sleek, stylish and simple. Made in Spain by Justor, the BISA120 is highly functional and adjustable.

Simplistically, the spring will act as a door closer and close the door once opened. Made out of aluminium or AISI 304 stainless steel, the BISA120 single action spring hinge is ideal for internal or external applications. Once installed, the BISA120 spring hinge can be adjusted to bring the door back quickly or slowly.

The Justor BISA120 has multiple tension settings for detailed control of door closure speed and adjustments can be made without having to take the door down. Alternatively, by reversing the tension on the BISA120, the spring can be set to assist in the opening of a door.

The BISA120 spring hinge can be used on perimeter doors, pool doors, gates, front doors, large feature doors, office doors & bedroom doors, just to name a few. The BISA120 is ideal for restaurants, hospitals, commercial buildings, apartments, boats and residential houses and general projects of all sizes.

Cost effective and highly functional, it is a real and effective alternative to traditional door closers and other closing solutions. The BISA120 spring hinge comes with a 2 year manufacturer's Guarantee. Made to exacting European standards in Spain by Justor, the BISA120 is a maintenance free solution - no periodic greasing or adjustments required, just 1 drop of oil in the top cap once a year.

The BISA120 represents a smarter option when it comes to design and aesthetics.

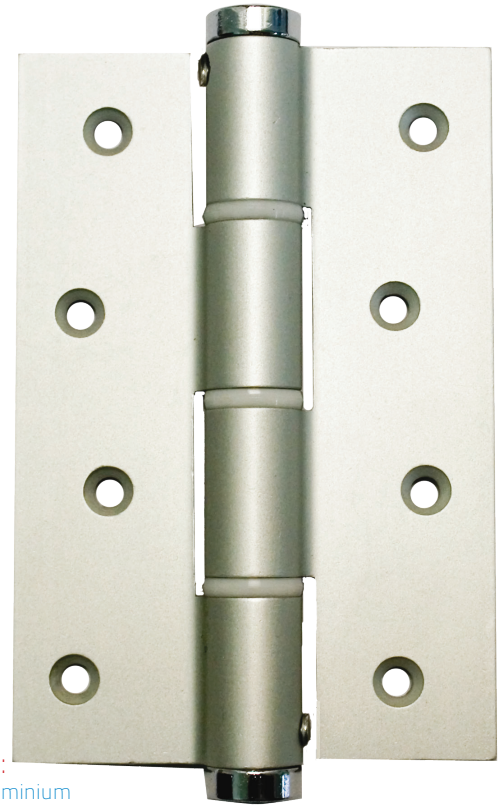



Order codes:

Base material: Aluminium

- BISA120AS - Anodized silver
- BISA120BLK - Anodized black
- BISA120WHT - Aluminium PC white
- BISA120AB - Anodized bronze
- BISA120AG - Anodized gold

Base material: Stainless steel

- BISA120SS - 304 grade SS

Non sprung

- BIsA120NAS - Anodized silver
- BISA120NBLK - Anodized black
- BISA120NWHT - Aluminium PC white
- BISA120NAB - Anodized bronze
- BISA120NAG - Anodized gold

BISA120 range quick facts:

- Spring resistance 500,000 cycles
- Maximum resistance to bending
- Torsion spring not a coil spring
- Variable closing strength (speed)
- 90° or 180° working aperture
- Solid and stylish design
- For timber or aluminium doors
- Slim profile vs. bulky door closer
- Quick & simple installation
- Detailed instructions included
- Manufactured in Spain with a 2 year manufacturer's guarantee

Spring hinge BISA180 technical data

Aluminium, zinc plated, 304 & 316 marine grade stainless steel

Anatomy of a single action spring hinge:

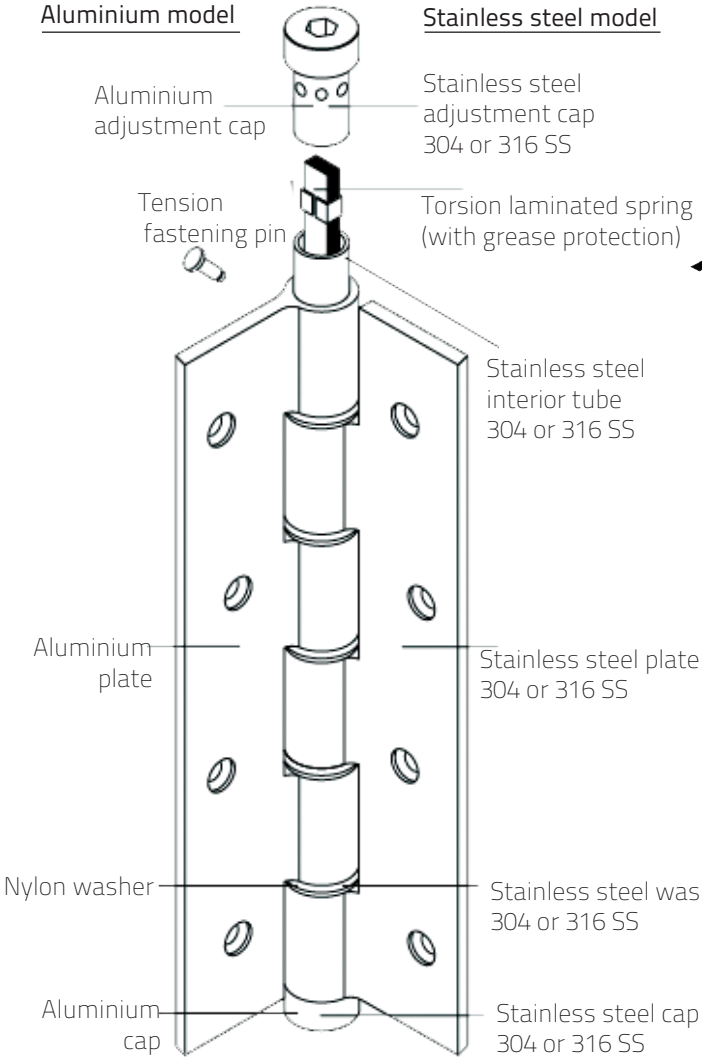

BISA180 adjustment instructions:

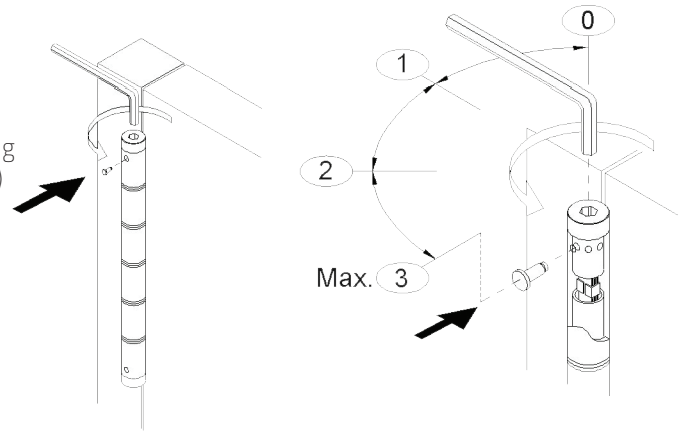

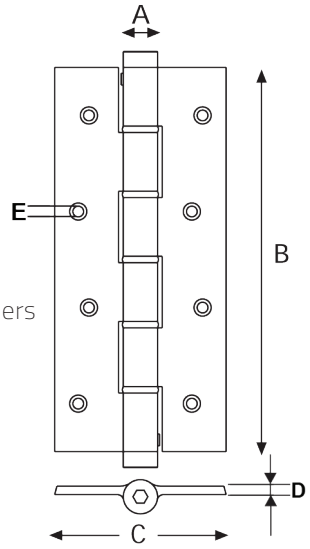

Single action hinge size and dimensions:

	BISA180 Aluminium	BISA180 SS, S3 & ZP
A	Ø16	Ø18
B	180	180
C	80	80
D	4	3
E	Ø5.3	Ø5.3

(All dimensions in mm)

Number of hinges required per door based on door weight & width:

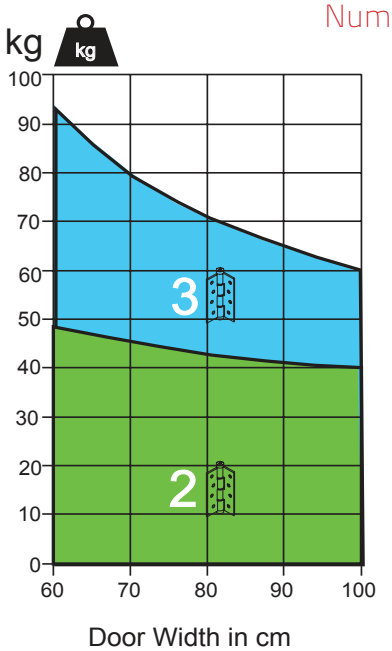

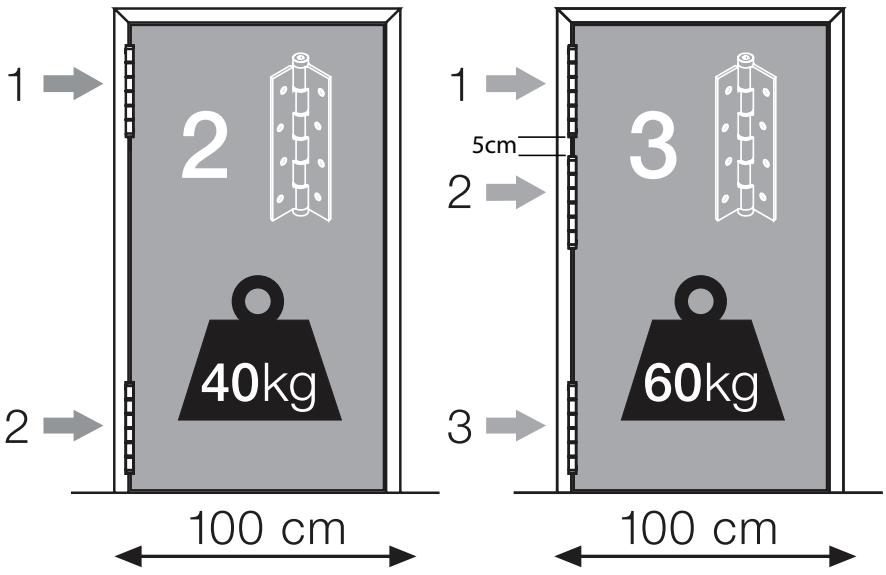

Spring hinge BISA180 functional data

Aluminium, zinc plated, 304 & 316 marine grade stainless steel

Now there is no longer a need for unsightly door closers, the BISA180 family of single action spring hinges are designed to automatically close a door with a subtle visual appearance. Made in Spain by Justor, the BISA180 is highly functional and adjustable, ideal for all doors that weigh up to 65kg (based on door 900mm wide).

Simplistically, the spring will act as a door closer and close the door once opened. Made out of Aluminium, Zinc Plated or AISI 304 or 316 Stainless Steel, the BISA180 single action spring hinge is ideal for internal or external applications. Once installed the BISA180 spring hinge can be adjusted to bring the door back quickly or slowly via three (3) tension settings. Each setting provides detailed control of the door closure speed. Adjustments can be made without having to take the door down.

Currently the BISA180 spring hinge is being used on perimeter doors, pool doors, gates, front doors, large feature doors, office doors & WC doors, just to name a few. The BISA180 has been installed in restaurants, hospitals, commercial buildings, apartments, boats, residential environments and general projects of all sizes throughout Australia and New Zealand.

An added advantage of the BISA180 is its appearance; it is sleek and has clean lines. Cost effective and highly functional, it is a real and effective alternative to traditional and unsightly door closers and closing solutions. Justor BISA180 spring hinge comes with a 2 year manufacturer's Guarantee and is available in a range of finishes and base materials; the Justor BISA180 is hard to overlook.

The BISA180 has won international design awards and is made to exacting European standards in Spain by Justor. The BISA180 is a maintenance free solution; no periodic greasing or adjustments required, just 1 drop of oil in the top cap once a year - a smart design. The BISA180 represents a smarter option when it comes to design and aesthetics.

BISA180 quick facts:

- Spring resistance 500,000 cycles
- Aluminium or 304 & 316 stainless steel, zinc plated
- Resistant to extreme climatic conditions (cold and humidity)
- Maximum resistance to bending
- Up to 92kg in door weight
- Torsion spring not a coil spring
- Variable closing strength (speed)
- 90° or 180° working aperture
- For timber or aluminium doors
- Slim profile vs. bulky door closer
- Quick & simple installation
- Available finishes: Stainless steel, silver, bronze or gold (by request)
- Manufactured in Spain and comes with a 2 year manufacturer's guarantee



Anodized black



Aluminium PC white



Anodized silver



Zinc plated

Ideal for welding onto metal jambs & doors



Where the BISA180 is being used

- Residential environments
- Apartment buildings
- Hotels of all sizes
- Commercial environments
- Industrial estates
- Restaurant kitchens
- Hospitals
- Retail market

Order codes:

Base material: Aluminium

- BISA180AS - Anodized silver
- BISA180BLK - Anodized black
- BISA180WHT - Aluminium PC white
- BISA180AB - Anodized bronze
- BISA180AG - Anodized gold

Base material: Zinc

- BISA180ZP - Zinc plated

Base material: Stainless steel

- BISA180SS - 304 grade SS
- BISA180S3 - 316 marine grade SS

Non sprung

- BISA180NAS - Anodized silver
- BISA180NBLK - Anodized black
- BISA180NWHT - Aluminium PC white
- BISA180NAB - Anodized bronze
- BISA180NAG - Anodized gold

AISI 304 AISI 316

316 marine grade is ideal for sea air environments

Spring hinge BISA240 technical data
Zinc plated steel

NEW

Anatomy of a single action spring hinge:

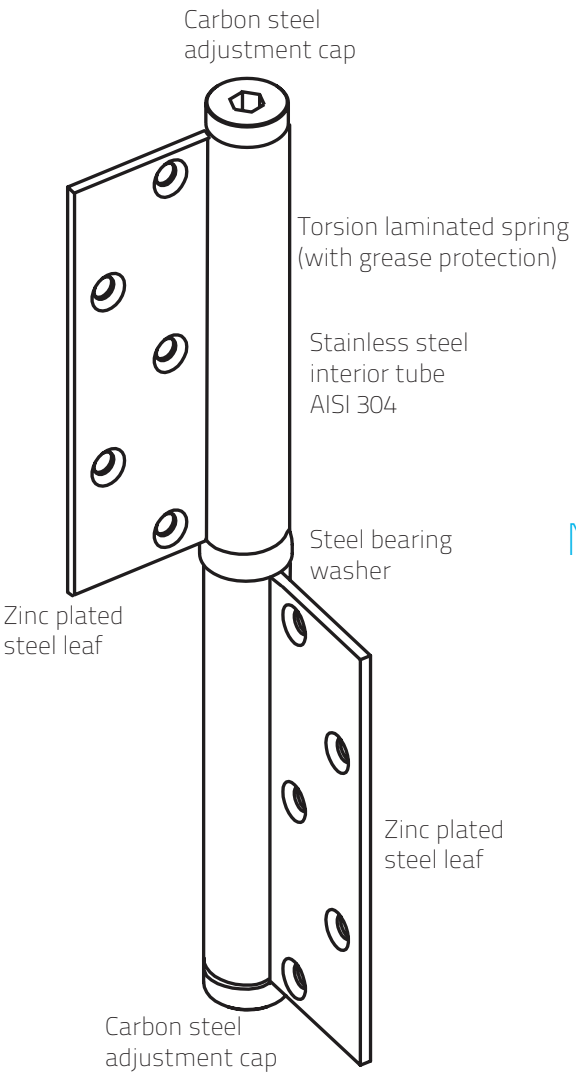

BISA240 adjustment instructions:

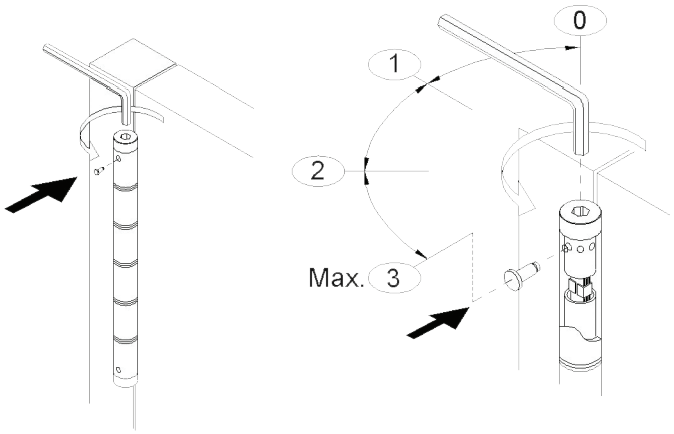

New for 2021

Single action hinge size and dimensions:

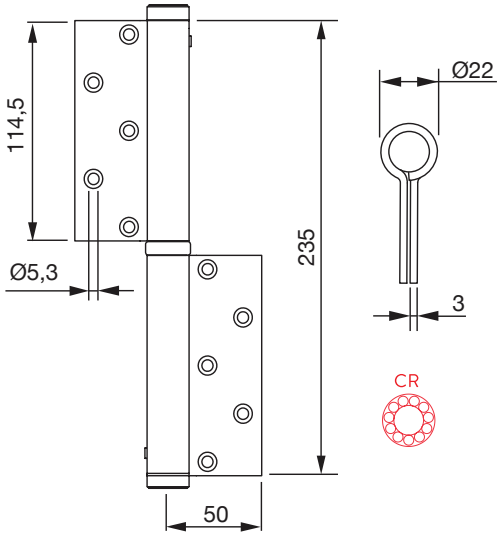

Number of hinges required per door based on door weight & width:

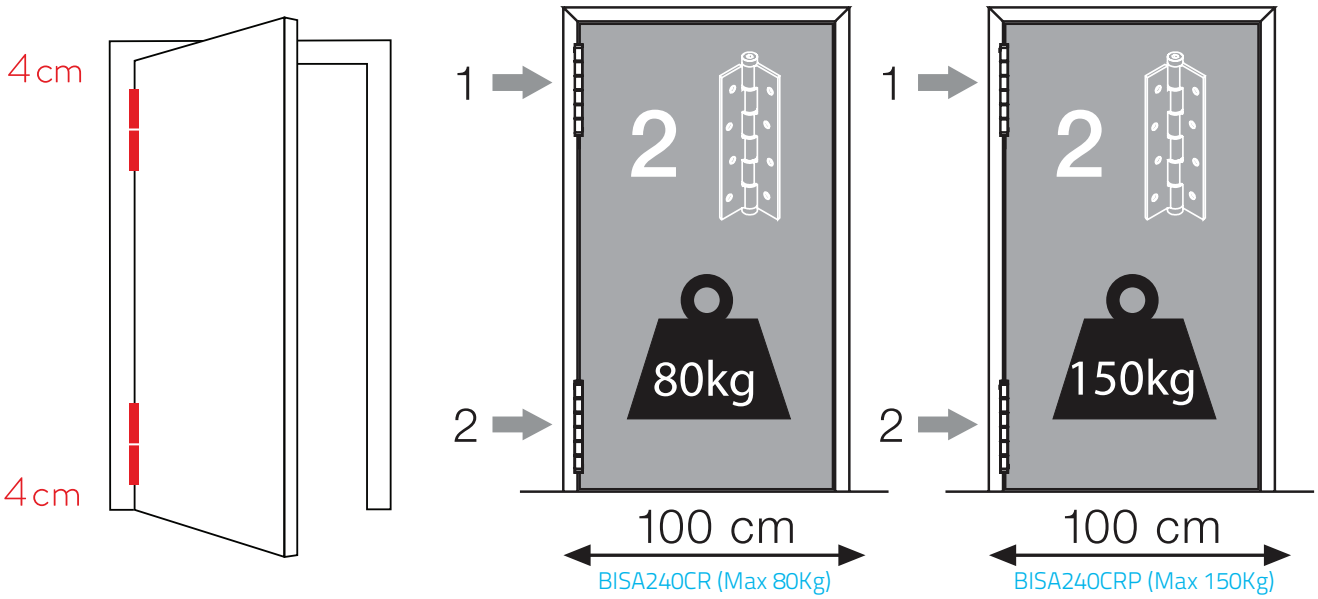

Spring hinge BISA240 functional data
Zinc plated steel

Now there is no longer a need for unsightly door closers, the BISA240 family of single action spring hinges are designed to automatically close a door with a subtle visual appearance. Made in Spain by Justor, the BISA240 is highly functional and adjustable, ideal for all doors that weigh up to 150kg (refer to the weight drawings).

Simplistically, the spring will act as a door closer and close the door once opened. Made out of Zinc plated steel, the BISA240 single action spring hinge is ideal for internal or external applications. Once installed, the BISA240 spring hinge can be adjusted to bring the door back quickly or slowly via three (3) tension settings. Each setting provides detailed control of the door closure speed. Adjustments can be made without having to take the door down.

Currently the BISA240 spring hinge is being used on perimeter doors, pool doors, gates, front doors, large feature doors, & office doors, just to name a few. The BISA240 has been installed in restaurants, hospitals, commercial buildings, apartments, boats, residential environments and general projects of all sizes throughout Australia and New Zealand.

An added advantage of the BISA240 is its appearance; it is sleek and has clean lines. Cost effective and highly functional, it is a real and effective alternative to traditional and unsightly door closers and closing solutions. Justor BISA240 spring hinge comes with a 2 year manufacturer's guarantee; the Justor BISA240 is hard to overlook.

The BISA240 is a maintenance free solution; no periodic greasing or adjustments required, just 1 drop of oil in the top cap once a year - a smart design. The BISA240 represents a smarter option when it comes to design and aesthetics.

BISA240 quick facts:

- Spring resistance 500,000 cycles
- Zinc plated steel
- Resistant to extreme climatic conditions (cold and humidity)
- Maximum resistance to bending
- BISA240CRP | Up to 150kg in door weight
- BISA240CR | Up to 80kg in door weight
- Torsion spring not a coil spring
- Variable closing strength (speed)
- 90° or 180° working aperture
- For timber or aluminium doors
- Slim profile vs. bulky door closer
- Quick & simple installation
- Manufactured in Spain and comes with a 2 year manufacturer's guarantee

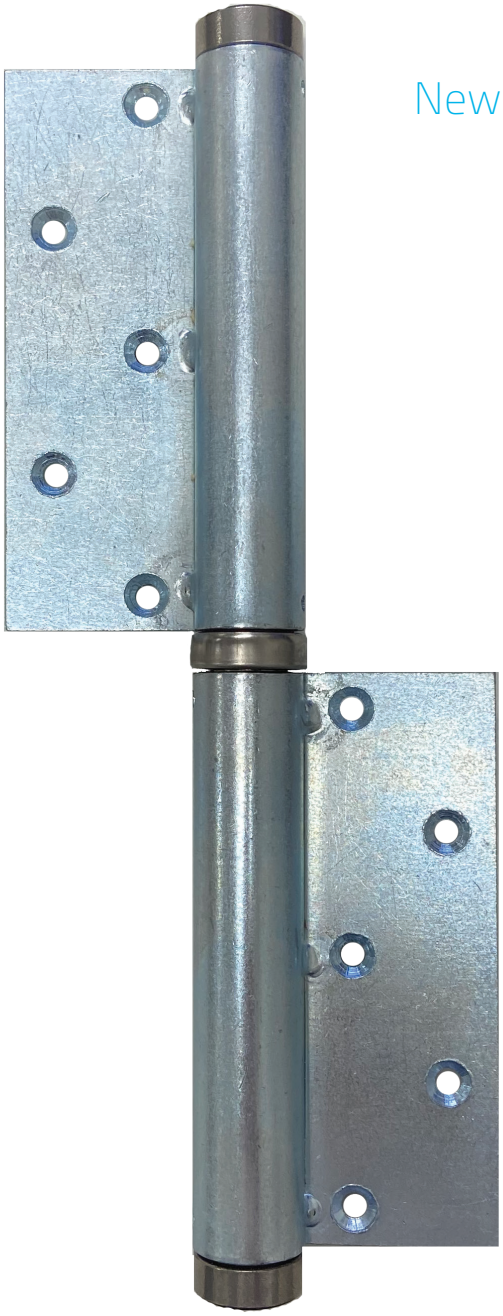

New for 2021

Where the BISA240 is being used

- Residential environments
- Apartment buildings
- Hotels of all sizes
- Commercial environments
- Industrial estates
- Restaurant kitchens
- Hospitals
- Retail market

Order codes:

Base material: Zinc plated steel

- BISA240CRP (Max 150Kg)
- BISA240CR (Max 80Kg)

Lift-off spring hinges BIPM120 technical data
Aluminium

Anatomy of a lift-off spring hinge:

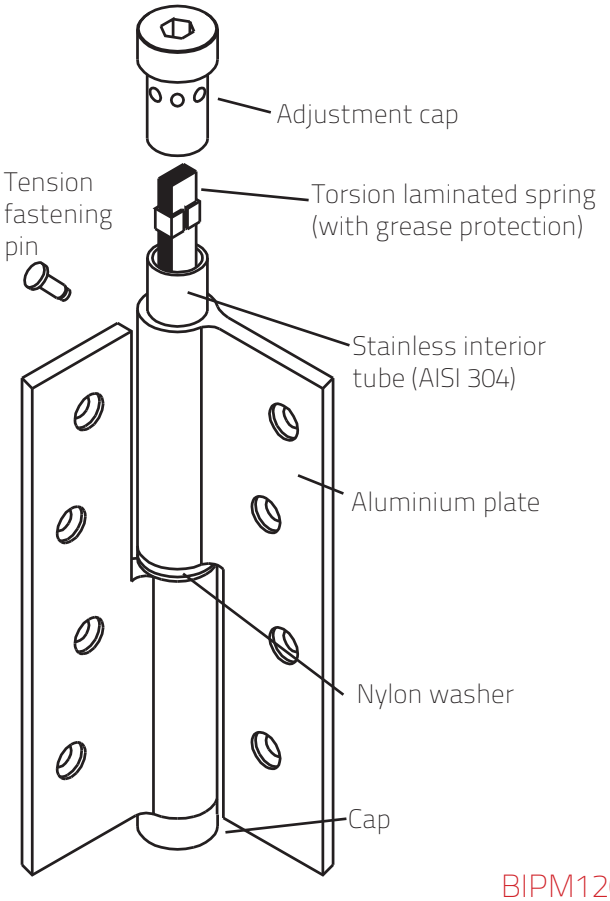

BIPM120 adjustment instructions:

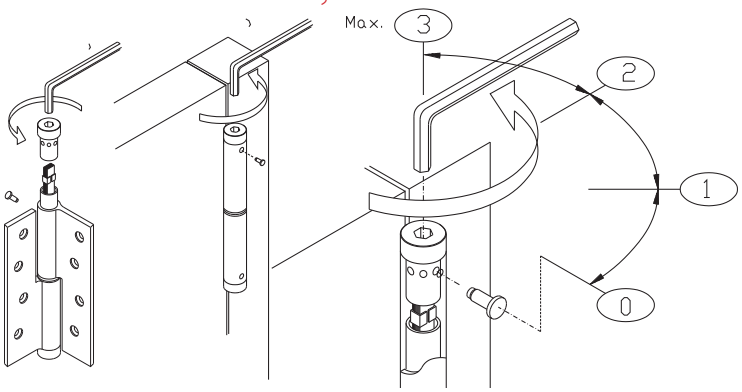

Lift-off gap:

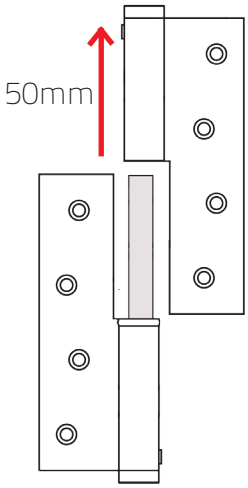

Dimensional information:

	BIPM120 Aluminium
A	Ø16
B	120
C	80
D	4
E	Ø5.3

(All dimensions in mm)

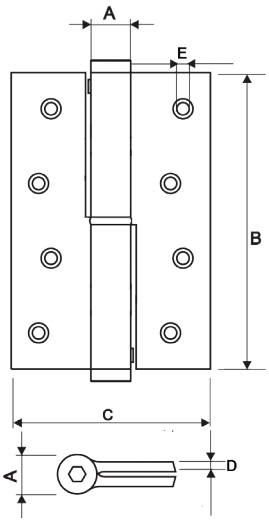

BIPM120 range:

The BIPM120 is a tangible and cost effective solution for doors that need to automatically close, but also have the added safety function of a lift-off hinge for doors that weigh up to 30kg.

The BIPM120 is incredibly versatile and adjustable without taking the door down. The closing tension will not impact the door's ability to be lifted off from the jamb. Made in Spain by Justor, the BIPM120 comes with a 2-year manufacturer's guarantee.
The BIPM120 - the smaller, smarter choice

Australian Handing / Left

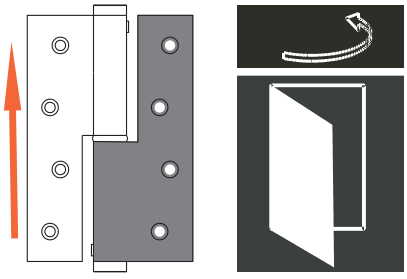

- BIPM120L - Anodized silver

Australian Handing / Right

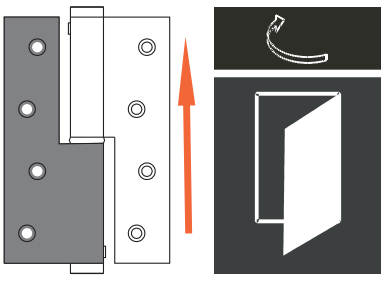

- BIPM120R - Anodized silver

Number of hinges based on door weight:

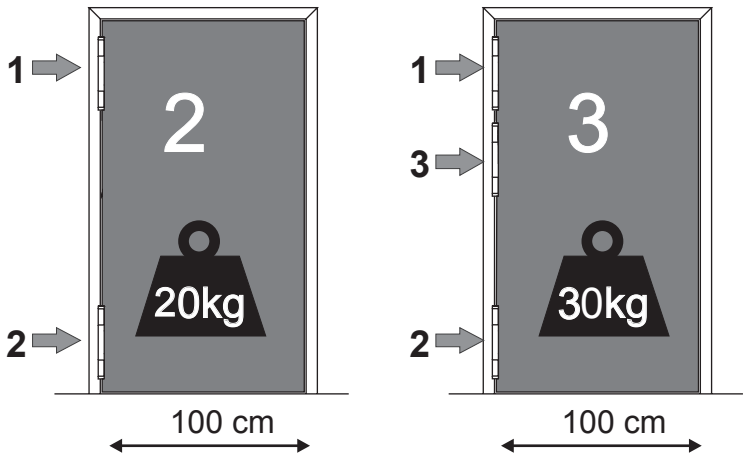

Lift-off spring hinge BIPM120 functional data
Aluminium

The revolutionary designed and engineered BIPM120 spring loaded self-closing lift-off hinge for the commercial and residential markets by Justor of Spain combines two important aspects of door functionality, the ability to automatically close a door and to lift the same door off its hinges for safety reasons.

The BIPM120 has been designed to carry and automatically close doors that weigh up to 30kg that require the functionality of traditional lift-off hinges. Guaranteed for 2 years and stocked locally, the BIPM120 is made out of Aluminium and AISI 304 Stainless Steel components.

Once installed the BIPM120 has multiple adjustment points to bring the door back quickly or slowly with the added advantage of still being a lift-off hinge. Ideally suited for toilet or partition doors, office and bedroom doors, just to name a few. The BIPM120 is ideal for residential environments, restaurants, hospitals, commercial buildings, apartments, boats and general projects of all sizes.

Adjusting the closing speed of the door is easy and practical. The Justor BIPM120 has multiple tension settings for detailed control of door closure speed and adjustments can be made without having to take the door down and without impacting the ability to lift the door off the hinges. Aesthetically pleasing to the eye, cost effective and highly functional, the BIPM120 is a real and cost effective solution for doors that require automatic closing and still retains the lift-off functionality of traditional lift-off hinges.

Made to exact European standards in Spain by Justor. The BIPM120 is a maintenance-free solution, no periodic greasing or multiple adjustments required, just 1 drop of oil in the top cap once a year.

The BIPM120 represents a smarter option when it comes to design and aesthetics.





BIPM120 range quick facts:

- Spring resistance 500,000 cycles
- Two part lift-off hinge
- Resistant to extreme climatic conditions (cold and humidity)
- 50mm lift-off gap
- Maximum resistance to bending
- Up to 30kg in door weight
- Torsion spring not a coil spring
- Variable closing strength (speed)
- 90° or 180° working aperture
- Solid and stylish design
- For timber or aluminium doors
- Slim profile vs. bulky door closer
- Quick & simple installation
- Detailed instructions included
- Available finish: Silver
- Manufactured in Spain and comes with a
- 2 Year manufacturer's guarantee

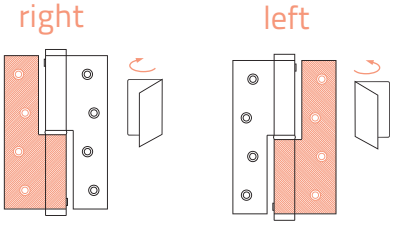

Order codes:

- BIPM120L - Anodized silver (left hand)
- BIPM120R - Anodized silver (right hand)
- Australian handing system used



BIST150BLK – Quick-fix hinge (anodized black)



BIST150SS - Quick-fix hinge (stainless steel 304)

Spring hinge BIST150 functional data

Quick-fix interleaf aluminium & 304 stainless steel



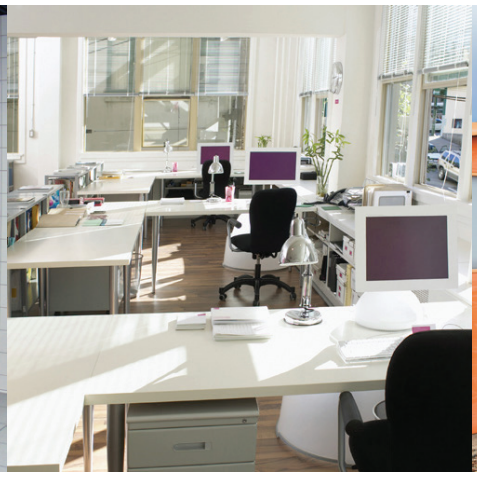



Ideal as an alternative to a traditional door closer for commercial and domestic aluminium framed swing doors.

Installation of the BIST150:

Designed for doors that fit the following profile: aluminium framed doors and jambs, steel jambs or, doors where there is little clearance between the door and the jamb.

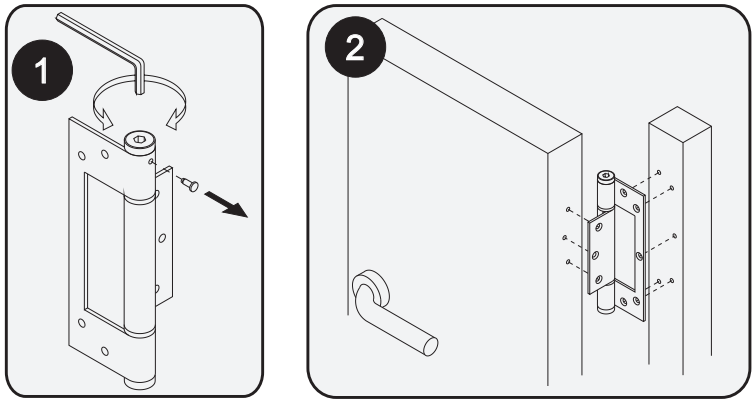

Easy 2 step installation process. Step 1, insert allen key into head and turn to set tension re-insert the pin. Step 2, screw or rivet the hinge to the door and door jamb. Easy. You're done.

Dimensions of the BIST150:

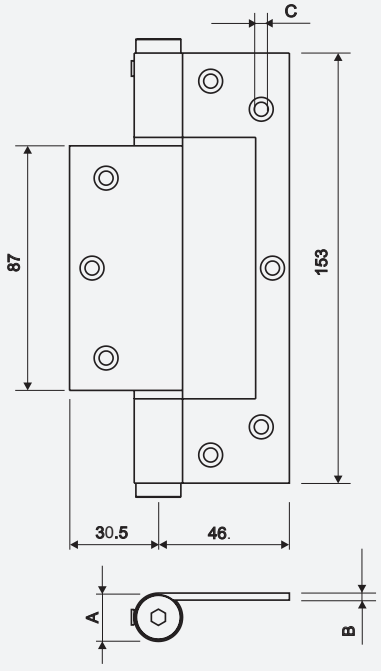

All dimensions in millimeters.
The BIST150 has been designed with its appearance in mind. Small & Slim.

Mod.	A	B	C
ST 150 Aluminium	Ø16	2.5	Ø5
ST 150 Stainless	Ø17	2.5	Ø5.5

Number of hinges required per door:

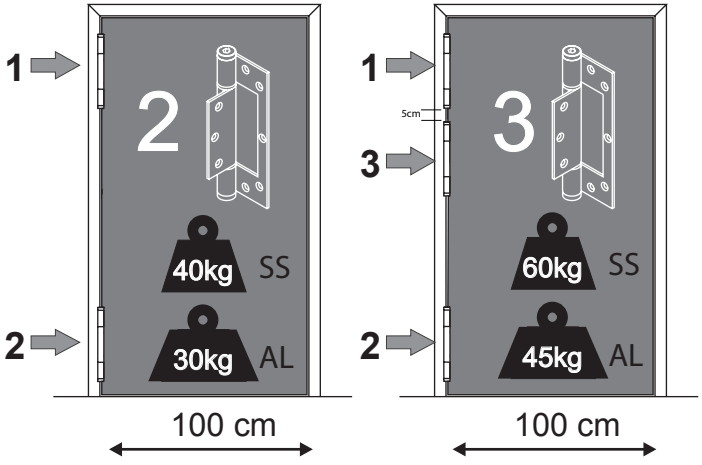

Adjustment of the BIST150:

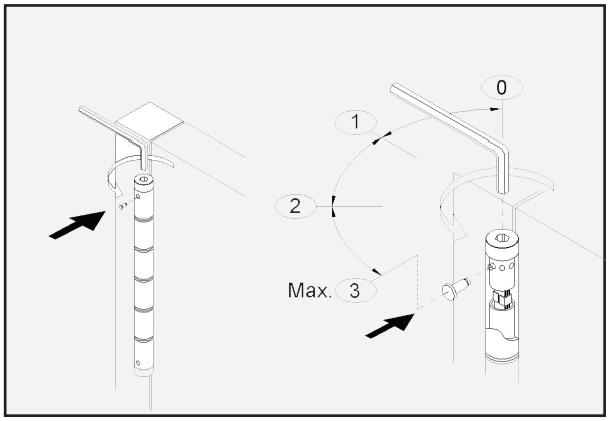

Multiple adjustment points for increasing or decreasing the spring's tension. Simple function, pull pin, turn head with allen key and replace pin. No need to remove the door.

Spring hinge BIST150 functional data

Quick fix interleaf aluminium & 304 stainless steel

Automatically closing an *aluminium* framed door is now so much easier.

Now there is no longer a need for unsightly door closers for aluminium framed doors, or doors with steel jambs, the BIST150 single action quick fix spring hinge is designed to automatically close doors with a subtle visual appearance. Its sleek, stylish and simple design makes it ideal for all environments. Made in Spain by Justor, the BIST150 is highly functional and adjustable, ideal for all doors that weigh up to 60kg. (refer to the weight chart).

The BIST150 has been specifically designed as a quick fix hinge for aluminium framed self-latching doors, including doors with steel or aluminium jambs. Also practical for doors where there is very little gap between the door and the jamb as the hinge is only 2.5mm thick.

Simplistically, the spring acts as a door closer would, by bringing the door back to the closed position once opened. Made out of AISI 304 stainless steel or aluminium, the BIST150 single action spring hinge is ideal for internal or external applications in any environment. Once installed the BIST150 spring hinge can be adjusted to bring the door back quickly or slowly.

The Justor BIST150 has three (3) tension settings for detailed control of door closure speed and adjustments can be made without having to take the door down, alternatively, by reversing the tension on the BIST150, the spring can be set to assist in the opening of the door.

An added advantage of the BIST150 is its appearance; it is sleek with clean lines. Cost effective and highly functional, it is a real and effective alternative to traditional door closers and other closing solutions. The BISA120 spring hinge comes with a 2 year manufacturer's guarantee and is available in a range of finishes and base materials. Made to exacting European standards in Spain by Justor, the BIST150 is a maintenance free solution - no periodic greasing or adjustments required, just 1 drop of oil in the top cap once a year.



Anodized black



Aluminium
PC white



Order codes:

Base material: Aluminium
- BIST150BLK - Anodized black
- BIST150WHT - Aluminium PC white

Base material: Stainless Ssteel 304
- BIST150SS - Stainless steel

Non sprung Kit
- BIST150NBLK - Anodized black
- BIST150NWHT - Aluminium PC white
- BIST150NSS - Stainless steel

BIST150 quick facts:

- Spring resistance 500,000 cycles
- Aluminium & stainless steel AISI 304
- Resistant to extreme climatic conditions (cold and humidity)
- Maximum resistance to bending
- Up to 60kg in door weight
- Torsion spring not a soil spring
- Variable closing strength (speed)
- 90° or 180° working aperture
- Solid and stylish design
- For wood or aluminium doors
- Slim profile vs. bulky door closer
- Quick & simple installation
- Manufactured in 100% in Spain
- Max door thickness 40mm
- 2 year manufacturer's guarantee



BIDA180SS - Double action (stainless 304)



BIDA120WSS – Wall mounted double action (stainless steel 304)



BIDA180AB - Double action (anodized bronze)



BIDA180ZP - Double action (zinc plated)





Double action hinges used in retail and residential environments.

Designed to work in especially harsh environments, Justor spring hinges are available in stainless steel AISI 304 and AISI 316 stainless steel, better known as "marine grade stainless steel". As a result of this material, the double action hinge range from Justor is ideal for coastal facilities, marine industry, saline environments, the food industry, clinic and hospital doors, industrial and design kitchens, interior entries to warehouses and shops in general as well as the livestock sector among others.

Justor double action hinges have been purposely designed for high volume traffic in commercial and industrial environments. Available in three (3) different widths, 30mm, 40mm and 50mm (only the BIDA180 range), they provide a solution to almost any need.

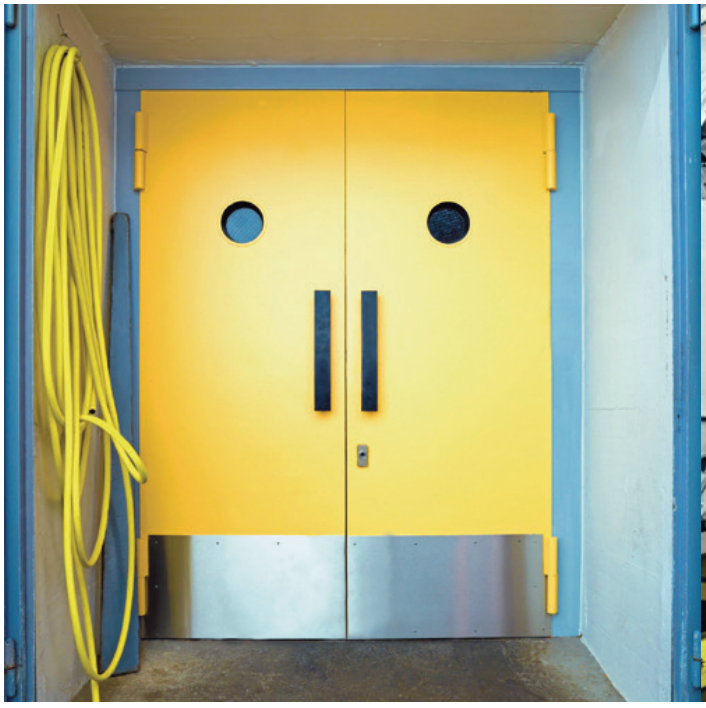







Double action hinges used in any environment.

Specifically made for the general market, Justor's double action range of hinges adapts perfectly to all kinds of swing doors, timber or aluminium. This is possible thanks to the specific design of the hinge and of the torsion based blades within the body (knuckle). Each hinge has 3-points of force intensity, easily adjustable. Optimal work efficiency with 2 hinge instalation, as well as 3 hinge installation for heaver doors. Load capacity up to 65kg (see application table).

Justor double action hinges are available in a range of finishes including silver, gold, bronze, black, white, stainless steel (304 and 316) and zinc plated just to name a few. A finish for any project or environment.





Spring hinge BIDA120W & BIDA180W technical data

Aluminium **wall mounted** - No jamb required



Dimensions of the BIDA120W & BIDA180W:

Mod.	A	B	C	D
BIDA180W	180	Ø1	4	Ø5.3	37
BIDA180WA	180	Ø1	4	Ø5.3	47
BIDA120W	120	Ø1	4	Ø5.3	37

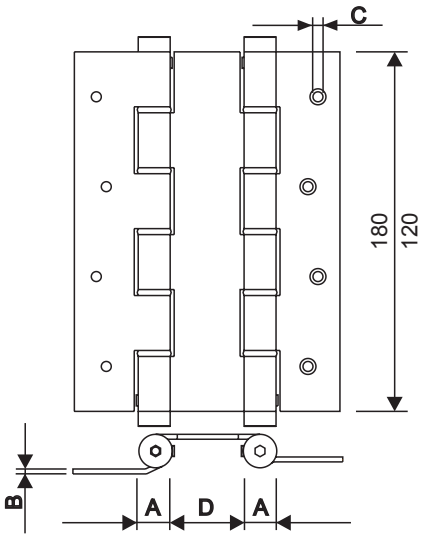

Adjustment of the BIDA120W & BIDA180W:

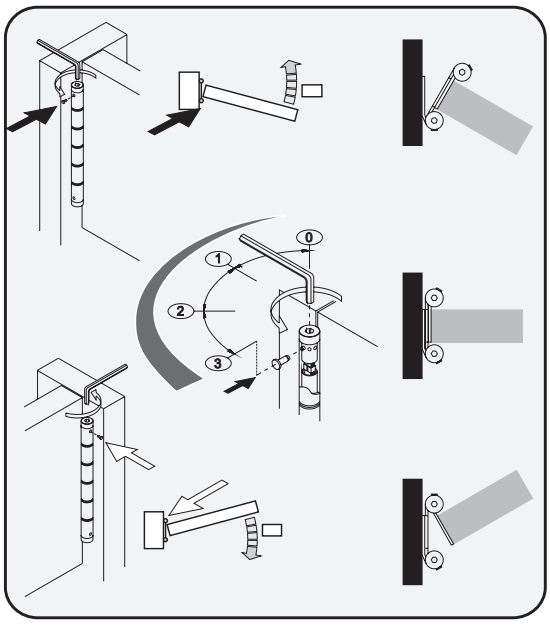

Multiple adjustment points for increasing or decreasing the spring's tension. Simple adjustment, pull out the pin, turn head with allen key and replace pin. No need to remove the door.

Installation of the BIDA120W & BIDA180W:

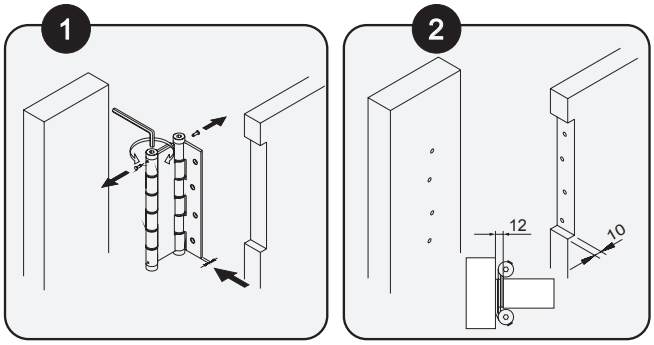

Easy 2 step installation process. Step 1, cut rebate into door, insert allen key into head of hinge remove pin, turn to release tension, reinsert pin. Step 2, screw hinge to door & wall jamb, re-adjust tension. Easy. You're done.

Number of hinges required per door:

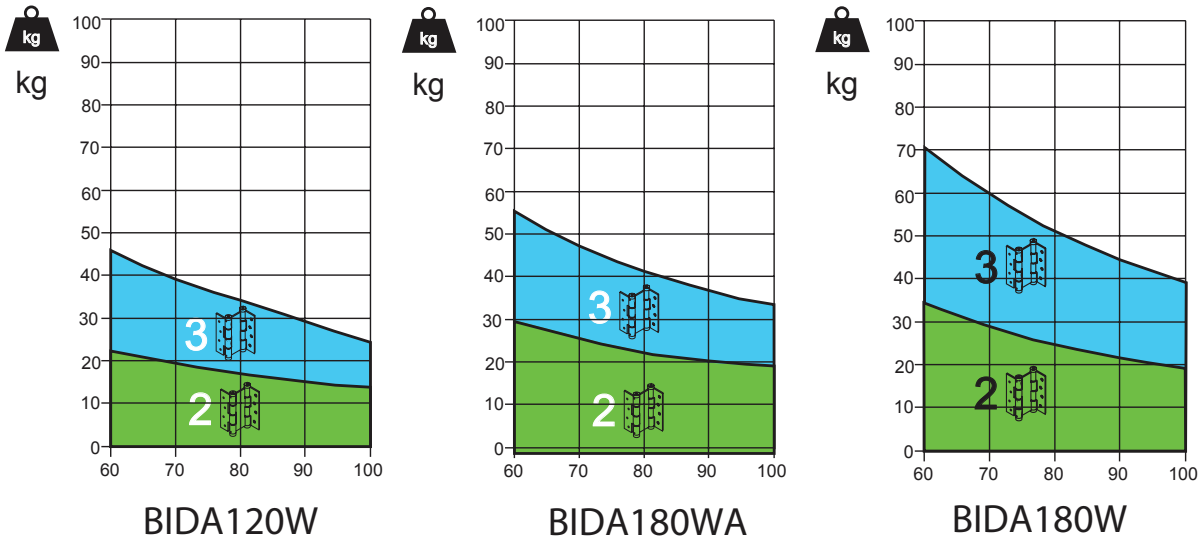

Based on a sliding scale, typical number of hinges per door starts at 2 increasing to 3 based on the graph above. For doors that require 3 hinges, please fit the 1st hinge at top, the 2nd placed 5cm below 1st hinge and the 3rd hinge at bottom.

Spring hinge BIDA120W & BIDA180W functional data

Aluminium **wall mounted** - No jamb required

Unlike traditional double action hinges which require a jamb to mount onto, the BIDA120W & BIDA180W do not. Due to its revolutionary design, the BIDA120W & BIDA180W double action spring hinges from Justor of Spain mount directly to a flat surface. No need to build out the wall or the jamb to cater for the knuckles of the hinge. Screw straight onto the wall. Simple, clean and easy.

What makes the BIDA120W & BIDA180W totally unique is its revolutionary design. Specifically engineered to cater for doors where the traditional jamb for the hinge to be mounted to does not exist. With this fact in mind, the BIDA120W & BIDA180W opens up endless possibilities to where you can hang a door and how the door and wall can be designed with aesthetics of the environment in mind.

Ideal for internal or external applications, wherever a dual swing door (a door that swings in both directions such as a pivot door does) needs to return to a centre position without assistance. Designed to automatically close doors with a subtle visual appearance. Its sleek, stylish and simple design makes it ideal for all environments. Made in Spain by Justor, the BIDA120W & BIDA180W are highly functional and adjustable to bring the door back quickly or slowly.

Made to exacting European standards in Spain by Justor, the BIDA120W & BIDA180W are a maintenance-free solution - no periodic greasing or adjustments required, just 1 drop of oil in the top top caps once a year. Cost effective and highly functional, it is a real and effective alternative to traditional double action closers and pivot sets; the Justor BIDA120W & BIDA180W are hard to overlook.

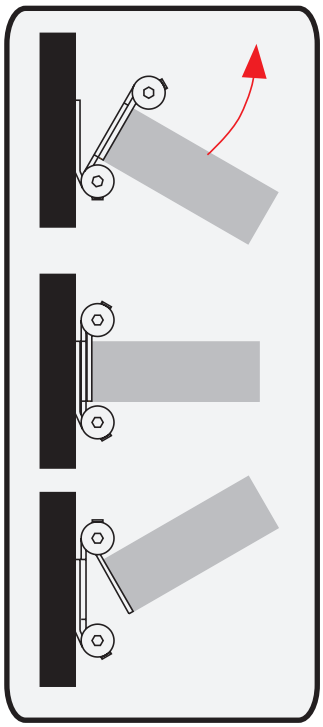



Wall mounted - No jamb !

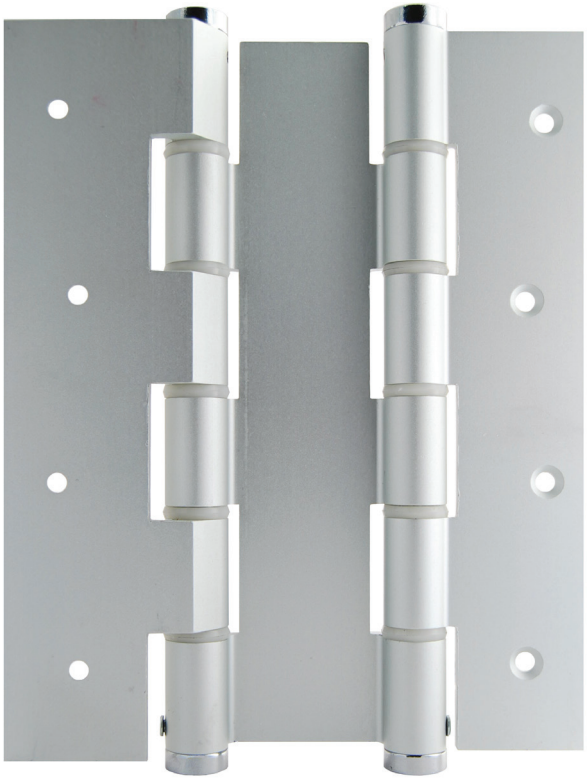

BIDA120W & BIDA180W range quick facts:

- Spring resistance 500,000 cycles
- Automatically closes a door
- Resistant to extreme climatic conditions (cold and humidity)
- Maximum resistance to bending
- Torsion spring not a coil spring
- Variable closing strength (speed)
- 90° or 180° working aperture
- Solid and stylish design
- For timber or aluminium doors
- Slim profile vs. bulky door closer
- Quick & simple installation
- Manufactured in Spain and comes with a
- 2 year manufacturer's guarantee

Order codes:

Base material: Aluminium

- BIDA120WAS - Anodized silver (Max. 35mm thick door)
- BIDA120WWHT - PC white (Max. 35mm thick door)
- BIDA180WAS - Anodized silver (Max. 35mm thick door)
- BIDA180WBLK - Anodized black (Max. 35mm thick door)
- BIDA180WWHT - PC white (Max. 35mm thick door)
- BIDA180WAAS - Anodized silver (Max. 45mm thick door)

Non sprung Kit (1 kit per knuckle)

- BIDA120NWAS - Anodized silver (Max. 35mm thick door)
- BIDA120NWWHT - PC white (Max. 35mm thick door)
- BIDA180NWAS - Anodized silver (Max. 35mm thick door)
- BIDA180NWBLK - Anodized black (Max. 35mm thick door)
- BIDA180NWWHT - PC white (Max. 35mm thick door)
- BIDA180NWAAS - Anodized silver (Max. 45mm thick door)

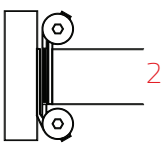

25-35mm BIDA120W BIDA180W

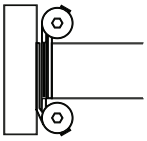

35-45mm BIDA180WA

Spring hinge BIDA120 technical data
Aluminium & 304 stainless steel

Anatomy of a small double action spring hinge:

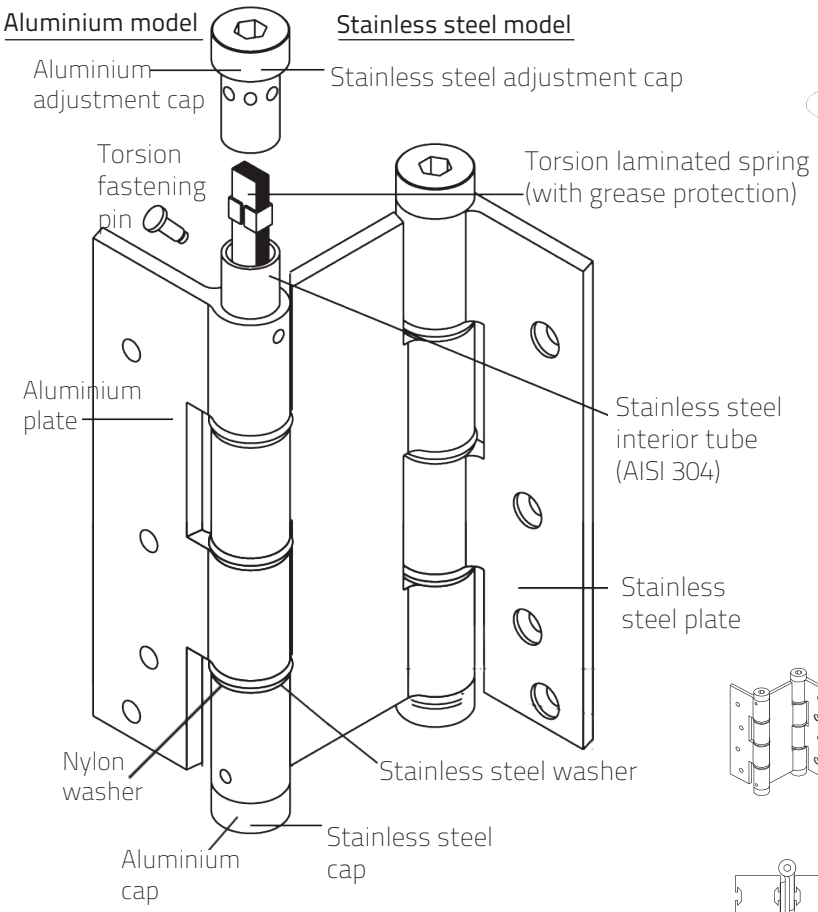

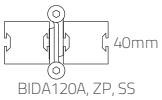

BIDA120A, ZP, SS

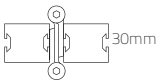

BIDA120E

BIDA120 adjustment instructions:

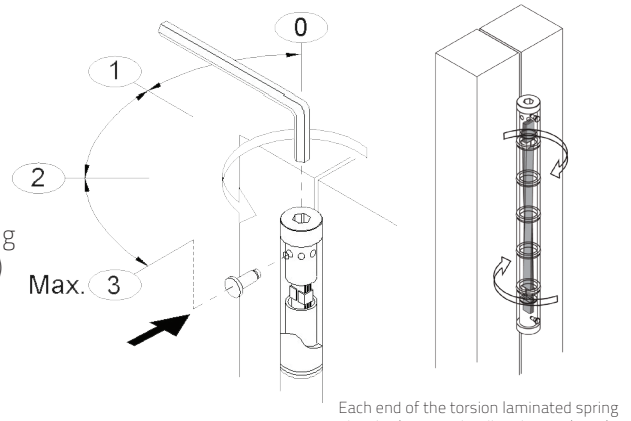

Each end of the torsion laminated spring twists in the opposite direction to the other

Dimensional information:

Model	BIDA120 SS, S3, ZP	BIDA120 A	BIDA120 E
A	37	37	26
B	Ø17	Ø16	Ø16
C	Ø5.3	Ø5.3	Ø5.3
D	120	120	120
Leaf Thickness			
E	2.5	4	4
Max Door Thickness			
	40	40	30

All measurements in mm

Where the BIDA120 is being used:

- Residential environments
- Apartments buildings
- Hotels of all sizes
- Commercial environments
- Industrial estates
- Hospitals
- Restaurant kitchens
- Boats, cars & trains

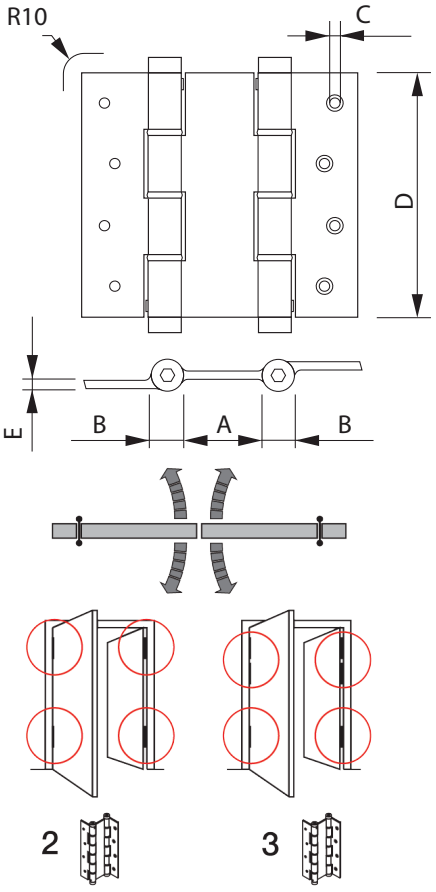

Number of hinges required and position:

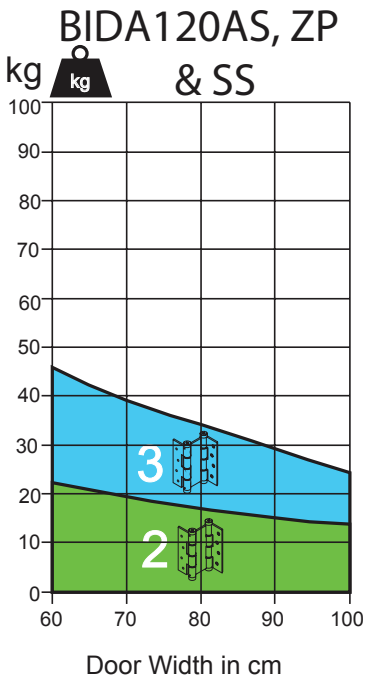

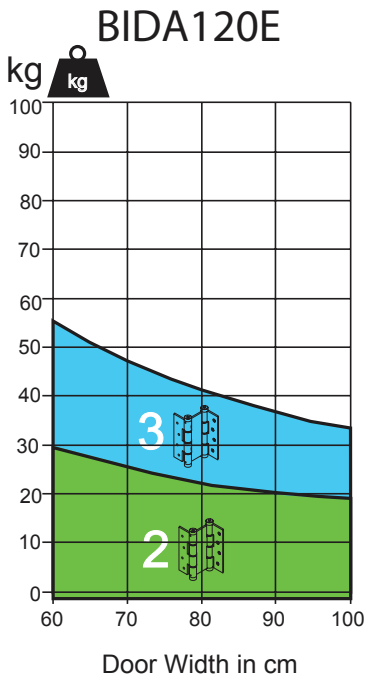

Spring hinge BIDA120 functional data
Aluminium & 304 stainless steel

No longer do you need door closers or pivot kits, the BIDA120 double action spring hinge is sleek, stylish and simple.

Made in Spain by Justor the BIDA120 is highly functional and adjustable, ideal for all lighter weight or small doors that weigh up to 55kg (refer to the weight graph). The BIDA120 double action spring hinge is to bring back to the centre position a door that swings open in both directions i.e. a kitchen door in a restaurant.

The BIDA120 double action spring hinge is an extension of the enormously successful larger BIDA180 double action spring hinge. It's the same in all respects, just smaller. It's been designed to provide the same functionality as the BIDA180 but on lighter weight doors. The BIDA120 is ideal for internal or external applications, wherever a dual swing door needs to return to a centre position without assistance. Once installed the BIDA120 spring hinge can be adjusted to bring the door back quickly or slowly in either direction.

The BIDA120 has multiple tension settings and adjustments can be made without having to take the door off.

An added advantage of the BIDA120 is its appearance; it is sleek and has clean lines. The BIDA120 is a maintenance free solution - no periodic greasing or adjustments required, just 1 drop of oil in the top top caps once a year. The BIDA120 spring hinge comes with a 2 year manufacturer's Guarantee and is available in a range of finishes and base materials. Cost effective and highly functional, it is a real and cost effective alternative to traditional double action closers and pivot sets; the Justor BIDA120 is hard to overlook.



Anodized silver



Stainless steel 304

BIDA120 range quick facts:

- Spring resistance 500,000 cycles
- Resistant to extreme climatic Conditions (cold and humidity)
- Maximum resistance to bending
- Torsion spring not a coil spring
- Up to 55kg in door weight per door
- Variable door movement strength
- 90° or 180° working aperture
- Solid and stylish design
- Ideal for restaurants and kitchens
- 2 year manufacturer's guarantee
- For timber, aluminium or metal doors

Order codes:

Base material: Aluminium

- BIDA120AS - Anodized silver (max 40mm thick door)
- BIDA120BLK - Anodized black (max 40mm thick door)
- BIDA120WHT - Alum PC white (max 40mm thick door)
- BIDA120AB - Anodized bronze (max 40mm thick door)
- BIDA120AG - Anodized gold (max 40mm thick door)

- BIDA120EAS - Anodized silver (max 30mm thick door)
- BIDA120EAB - Anodized bronze (max 30mm thick door)
- BIDA120EAG - Anodized gold (max 30mm thick door)

Base material: Stainless steel and zinc plated

- BIDA120SS - 304 stainless steel (max 40mm thick door)
- BIDA120ZP - Zinc plated (max 40mm thick door)

Non sprung

- Add the letter "N" between 180 and the finish code (BIDA120**N**AS)

Spring hinge BIDA180 technical data
Aluminium, zinc, 304 & 316 stainless steel

Anatomy of a double action spring hinge:

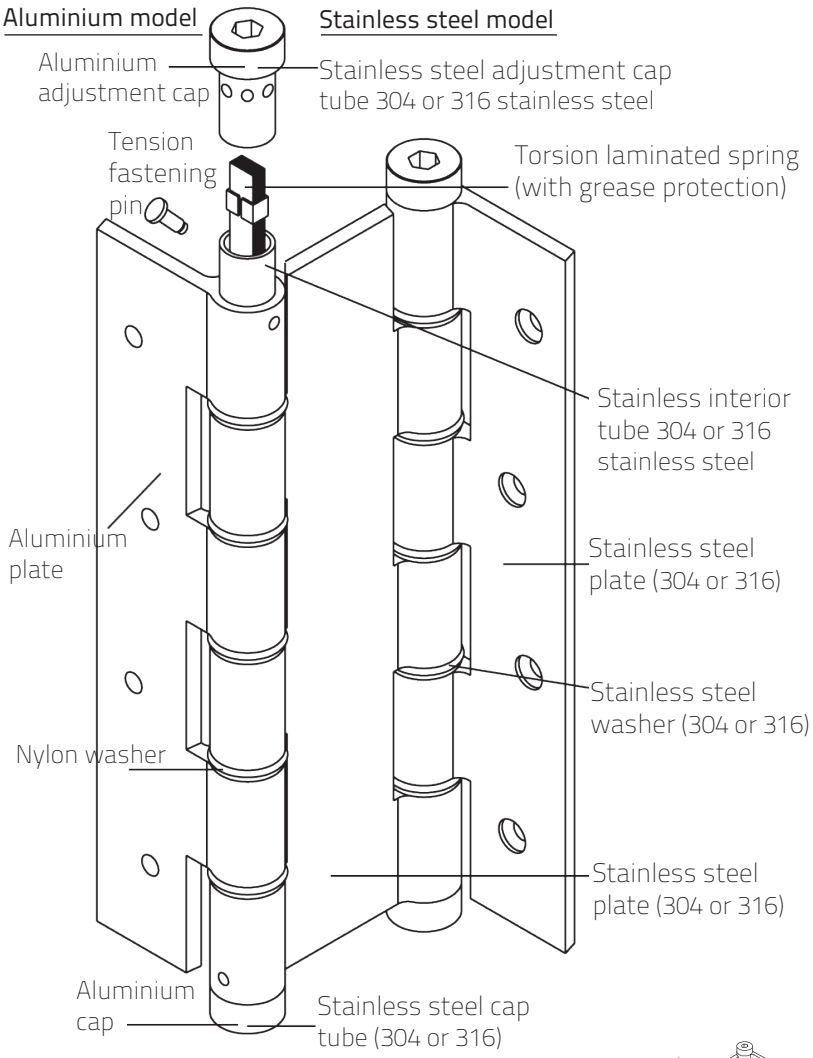

BIDA180 adjustment instructions:

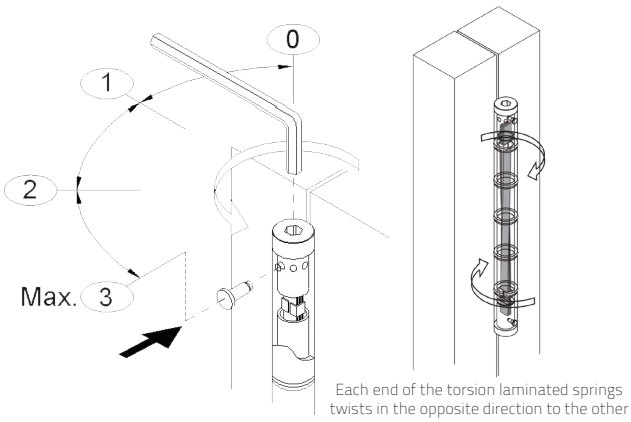

Each end of the torsion laminated springs twists in the opposite direction to the other

Dimensional information:

Model	BIDA180 SS, S3	BIDA180 ZP, Iron	BIDA180 A	BIDA180 E	BIDA180 AA
A	37	37	37	26	44
B	Ø18	Ø18	Ø16	Ø16	Ø16
C	Ø5.3	Ø5.3	Ø5.3	Ø5.3	Ø5.3
D	180	180	180	180	180
Leaf Thickness					
E	3	3	4	4	4
Max Door Thickness					
	40	40	40	30	50

All measurements in mm

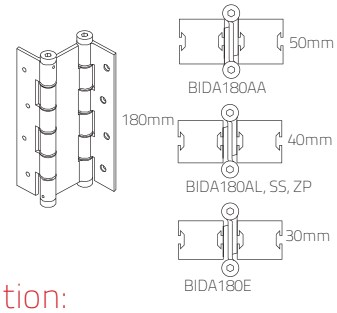

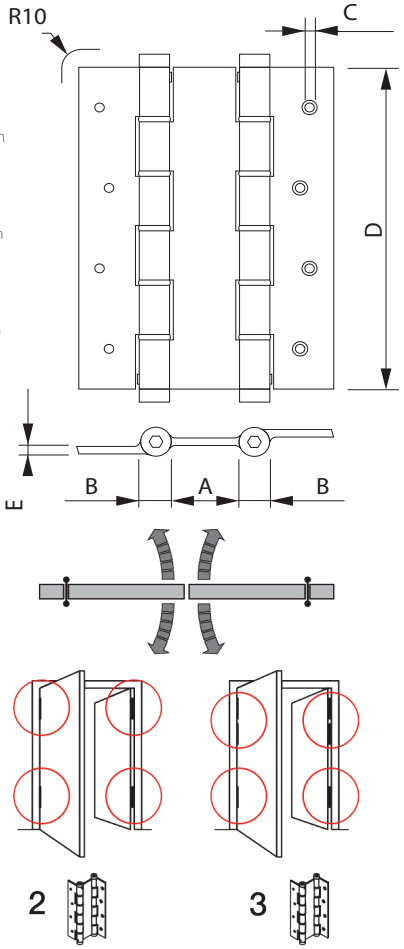

Where the BIDA180 is being used

- Residential environments
- Apartments buildings
- Hotels of all sizes
- Commercial environments
- Industrial estates
- Hospitals
- Restaurant kitchens
- Boats, cars & trains

Number of hinges required and position:

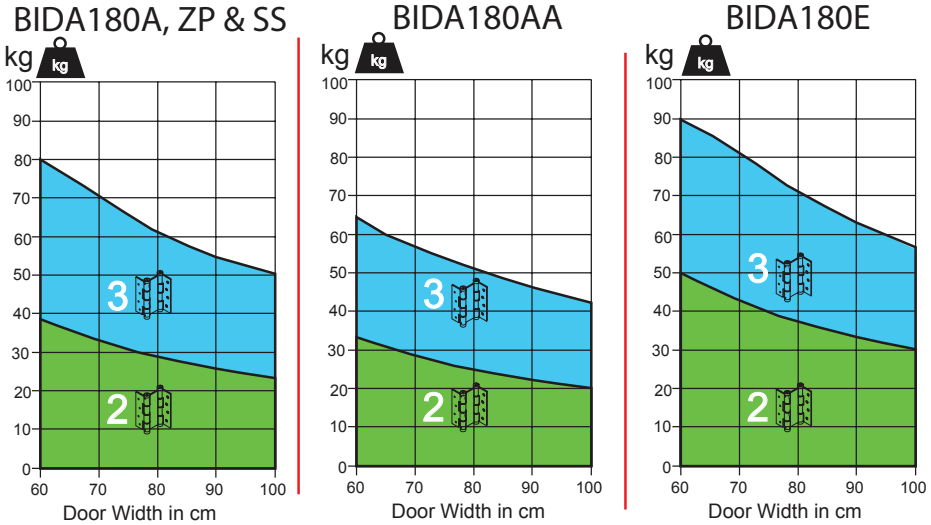

Spring hinge BIDA180 functional data
Aluminium, zinc, 304 & 316 stainless steel

No need for unsightly door closers, the BIDA180 Double Action Spring Hinge is sleek, stylish and simple. Made in Spain by Justor, the BIDA180 is highly functional and adjustable, ideal for all doors that weigh up to 95kg (refer to weight graph).

Simplistically the function of the BIDA180 double action spring hinge is to bring a door that swings open in both directions back to the centre position i.e. a kitchen door in a restaurant. Made out of Aluminium, Zinc or Stainless Steel the BIDA180 Double Action Spring Hinges are ideal for internal or external applications, wherever a dual swing door (a door that swings in both directions such as a pivot door does) needs to return to a centre position without assistance.

The BIDA180 has three (3) tension settings in each direction and adjustments can be made without having to take the door off. Made to exacting European standards in Spain by Justor, the BIDA180 is a maintenance free solution - no periodic greasing or adjustments required, just 1 drop of oil in the top top caps once a year. The BIDA180 spring hinge comes with a 2 year manufacturer's Guarantee. Cost effective and highly functional, it is a real and effective alternative to traditional double action closers and pivot sets.



Anodized black



Aluminium
PC white

Profile:



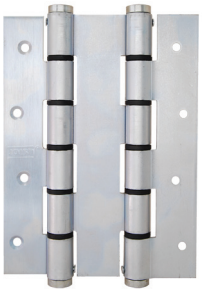

Zinc plated
Ideal for welding onto metal jambs & doors

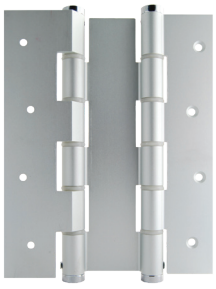

Anodized silver

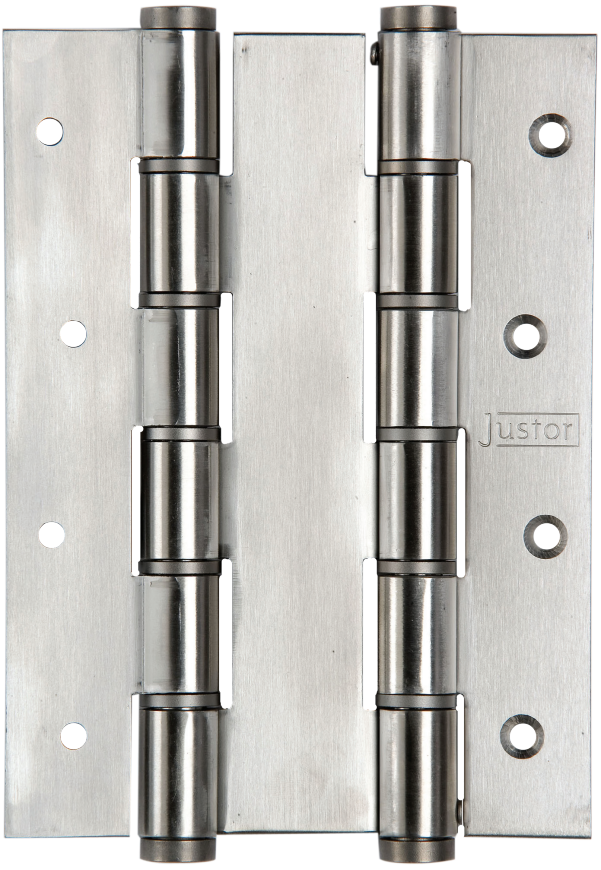

AISI 304 AISI 316

316 marine grade is ideal for sea air environments

BIDA180 range quick facts:

- Spring resistance 500,000 cycles
- Resistant to extreme climatic conditions (cold and humidity)
- Maximum resistance to bending
- Torsion spring not a coil spring
- Up to 95kg in door weight per door
- Variable door movement strength
- 90° or 180° working aperture
- For timber, aluminium or metal doors
- Ideal for restaurants and ditchens
- 2 year manufacturer's guarantee

Order codes:

Base material: Aluminium

- BIDA180AAS - Anodized silver (max 50mm thick door)

- BIDA180AS - Anodized silver (max 40mm thick door)
- BIDA180BLK - Anodized black (max 40mm thick door)
- BIDA180WHT - Alum PC white (max 40mm thick door)
- BIDA180AB - Anodized bronze (max 40mm thick door)
- BIDA180AG - Anodized gold (max 40mm thick door)

- BIDA180EAS - Anodized Silver (max 30mm thick door)
- BIDA180EAB - Anodized Bronze (max 30mm thick door)
- BIDA180EAG - Anodized Gold (max 30mm thick door)

Base material: Stainless steel and zinc plated

- BIDA180SS - 304 grade SS (max 40mm thick door)
- BIDA180S3 - 316 marine grade SS (max 40mm thick door)
- BIDA180ZP - Zinc (max 40mm thick door)

Non sprung

- Add the letter "N" between 180 and the finish code (BIDA180**N**AS)



BIMZB - Single action (anodized black)





Spring Hinge BIMZ functional data

Aluminium

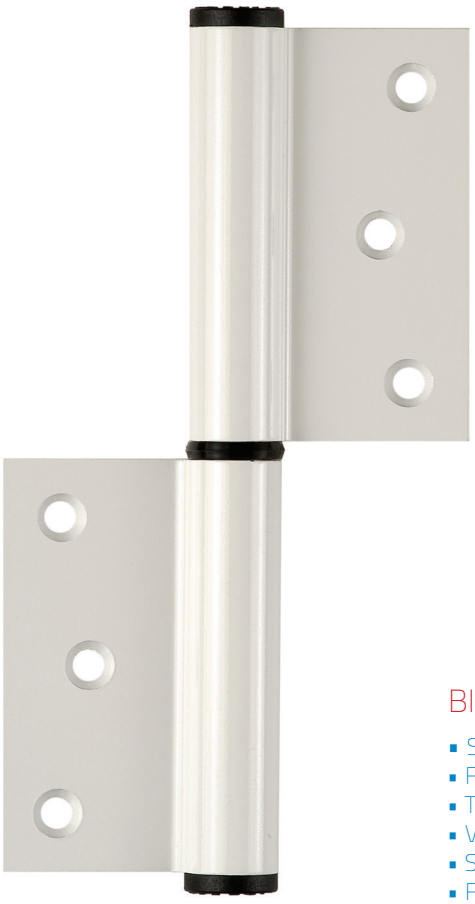

The Justor BIMZ spring hinge is your go-to for fly screen and light weight type doors at or around 5kg that need to returned to a closed position without assistance. The spring hinge BIMZ is ideal for timber or aluminium.

Installation of the spring hinge BIMZ is quick, neat and simple with built-in multiple adjustments for multiple tension settings allowing the door to come back quickly or slowly. No need for an unsightly door closer.

Available in silver, black or white, the BIMZ spring hinge is ideal to use as it will not lose its tension due to the torsion spring internally.

Made by Justor of Spain, the BIMZ unique design makes it a maintenance free solution - no periodic greasing or adjustments required, just 1 drop of oil in the top cap once a year. The BIMZ spring hinge comes with a 2 year manufacturer's Guarantee and is available in a range of finishes.

Aesthetically pleasing to the eye, cost effective and highly functional. The BIMZ is the only solution to consider for today's lightweight door spring hinge needs.

BIMZ quick facts:

- Spring resistance 250,000 cycles
- For light doors up to 5kg
- Torsion spring not a coil spring
- Variable closing strength
- Solid and stylish design
- For timber or aluminium doors
- Slim stylish profile
- Quick & simple installation
- Detailed instructions included
- 2 year manufacturer's guarantee



Technical data

BIMZ quick facts:

The BIMZ does not require periodical greasing, just 1 drop of oil in the top cap once a year. Due to its compact construction, it is a small diameter hinge. It has two (2) adjustment points and because it is made by Justor in Spain, it comes with a 2 year manufacturer's guarantee.

The BIMZ, the smart choice for fly screen & light weight doors

Adjustment instructions:

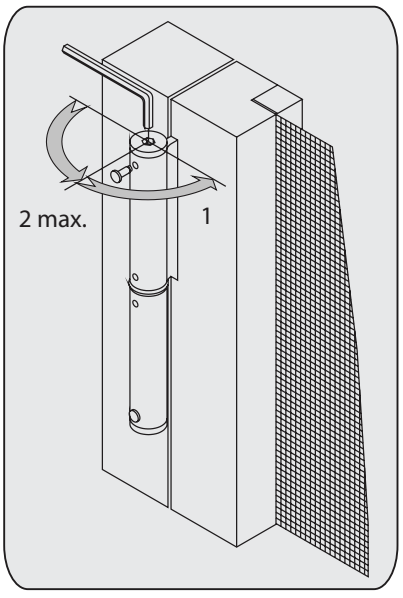

Dimensional information:

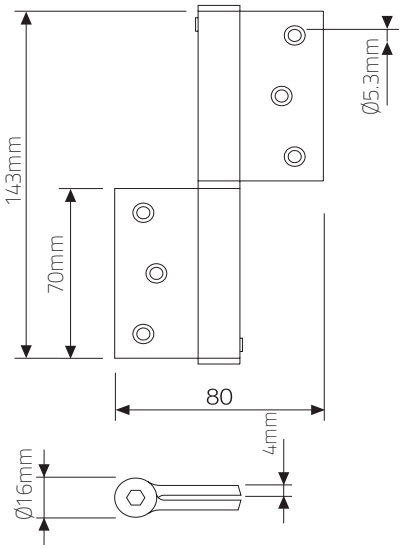

Installation:

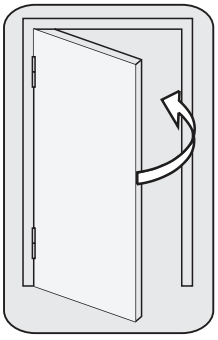

Install the spring hinges at the top and bottom of the door.
Used in place of normal hinges.

Order codes:

- BIMZS - Anodized silver
- BIMZB - Anodized black
- BIMZW - PC white

BIMPSI - Single action (anodized silver)

Perfect to turn exsisting non sprung doors into self closing doors by just adding a third hinge.

Ideal for doors up to 40kg. Tested upto 200.000 cycles. Installed at the center of the door.

Used on wardrobe doors, changing rooms, office doors and others.





Spring Hinge BIMP functional data

Aluminium

The Justor Spring hinge BIMP is ideal for all light weight doors that need to be returned to a closed position without assistance. The spring hinge BIMP is ideal for light weight doors and existing non-sprung doors where hinges currently exist .

Ideal for fly wire doors and all other light weight doors. Designed with retrofitting in mind, installation of the spring hinge BIMP is quick, neat and simple. It can conveniently be installed without having to dismantle the door.

Made by Justor of Spain, the BIMP's unique design makes it a maintenance-free solution - no periodic greasing or adjustments required, just 1 drop of oil in the top cap once a year. The BIMP spring hinge comes with a 2 year manufacturer's Guarantee and is available in a range of finishes.

The BIMP spring hinge provides the flexibility to change an existing non-sprung door into a full time automatic closing door. The BIMP can be applied to most light doors in any location imagined.

Stocked by Bellevue in large quantities, the BIMP is readily available in three (3) anodized finishes. It is aesthetically pleasing to the eye, cost effective and highly functional. It is the only solution to consider for today's light weight door spring hinge needs.

BIMP quick facts:

The BIMP does not require periodical greasing and works on a 180° aperture. Due to its compact construction it is a small diameter hinge. It has three (3) adjustment points and because it is made by Justor in Spain, it comes with a 2 year manufacturer's guarantee.

The BIMP, the smart choice for light weight doors

Profile:



BIMP quick facts:

- Spring resistance 200,000 cycles
- For light doors up to 40kg (850mm)
- Torsion spring not a coil spring
- Variable closing strength
- Solid and stylish design
- For timber or aluminium doors
- Slim stylish profile
- Quick & simple installation
- Detailed instructions included
- Available in silver, black or bronze
- 2 Year manufacturer's guarantee

Technical data

Anatomy of a hinge:

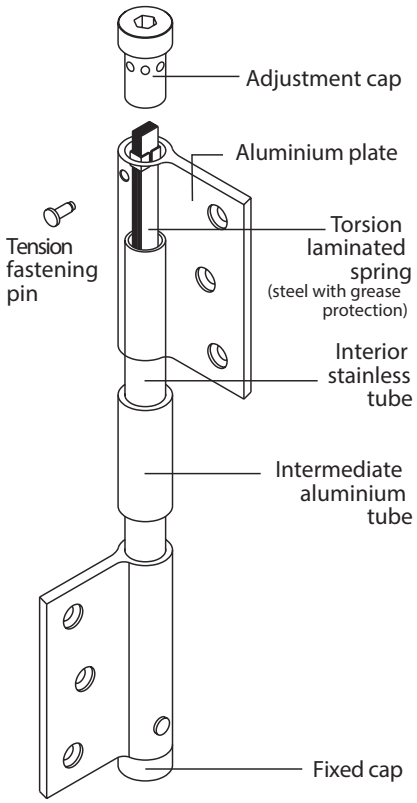

Adjustment instructions:

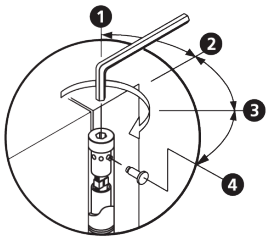

Installation

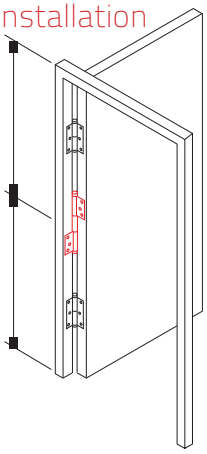

Install the spring hinge in the centre of the door between the two normal hinges.

Dimensional information:

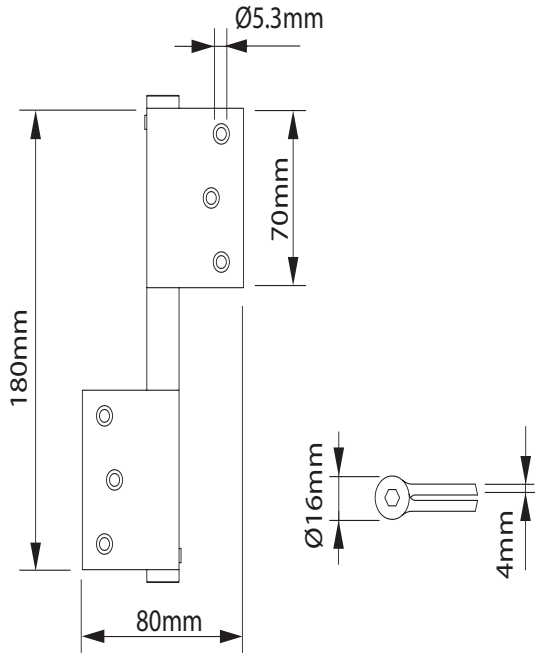

Order codes:

- BIMPSI - Anodized silver
- BIMPBZ - Anodized bronze
- BIMPBL - Anodized black



Quick and easy instalation. Simple to enable or disable the spring function.

Adjustable spring strength. Endurance of 250.000 work cycles. Aluminum finish in various colors.

Used on bathroom doors, storage rooms, stores and interior doors in general.

BIMBS - Single action (anodized silver)

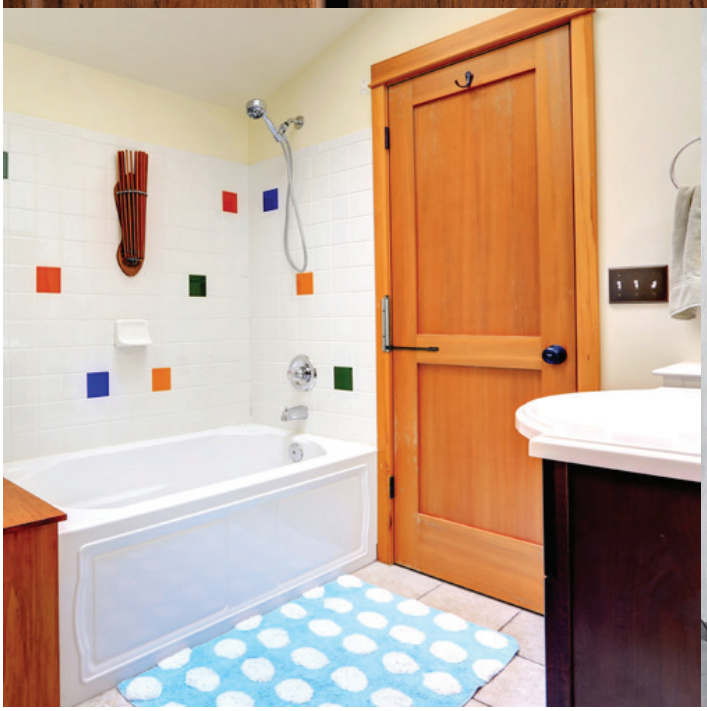



BIMB spring arm closer functional data
Aluminium

The BIMB spring closer is ideal for all doors that need to be returned to a closed position without assistance. It can be used on new doors or existing non sprung doors where normal hinges currently exist. The main advantage of the BIMB spring closer is that the "spring" mechanism is designed in such a way that it can be used part of or all of the time to automatically close the door.

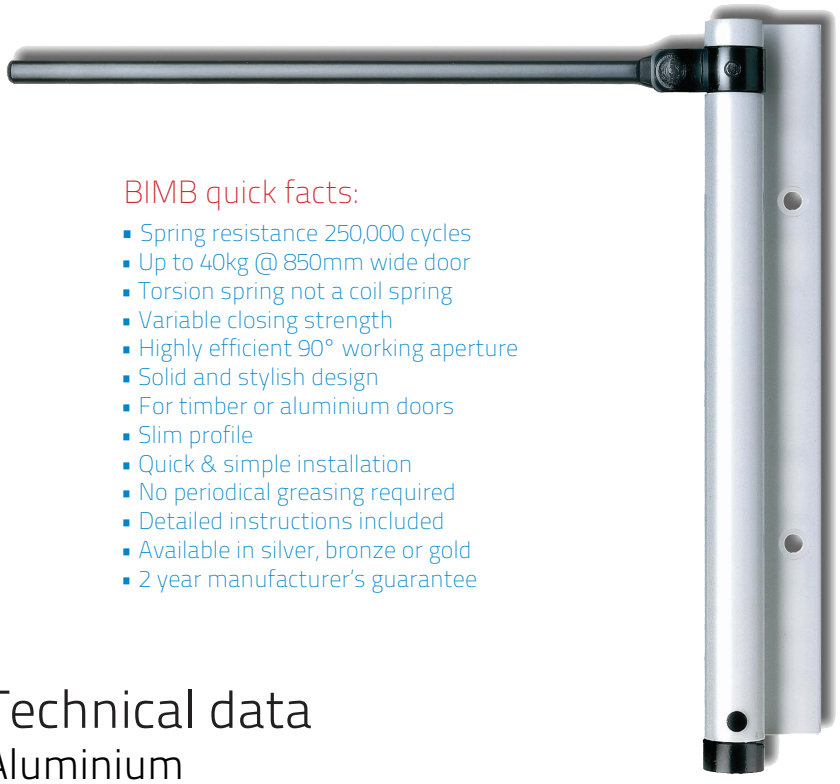

If the door is in auto-close mode, the spring arm is down, when the door is free to swing, the arm is up. Ideal for fly wire doors and all other light weight doors up to 40kg @850mm wide.

The BIMB spring closer provides the flexibility of being able to turn On or Off the spring function. Lowering the arm to a horizontal position to engage the spring or by raising the arm to a vertical position to disengage the spring, the user has the best of both worlds; a door that will close automatically or stay open.

Stocked by Bellevue in large quantities, the Justor BIMB is readily available in three anodized finishes. The Justor BIMB has multiple tension settings for detailed control of door closure speed; it is cost effective and highly functional. Applications for this type of functionality are endless.

BIMB quick facts:

- Spring resistance 250,000 cycles
- Up to 40kg @ 850mm wide door
- Torsion spring not a coil spring
- Variable closing strength
- Highly efficient 90° working aperture
- Solid and stylish design
- For timber or aluminium doors
- Slim profile
- Quick & simple installation
- No periodical greasing required
- Detailed instructions included
- Available in silver, bronze or gold
- 2 year manufacturer's guarantee

Technical data
Aluminium

Adjustment instructions:

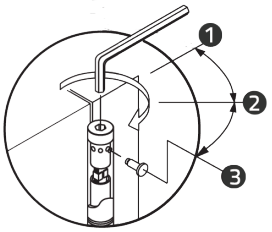

Installation:
Left or right hand doors

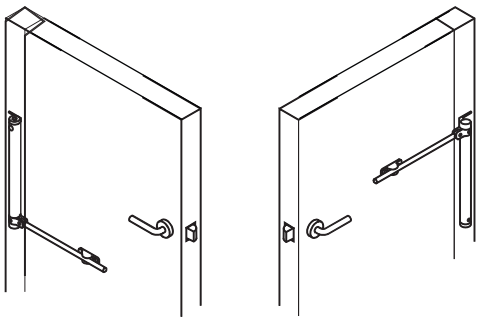

Dimensional information:

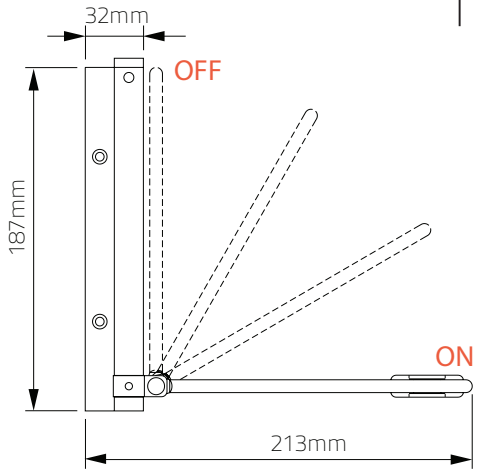

Anatomy of a spring arm closer:

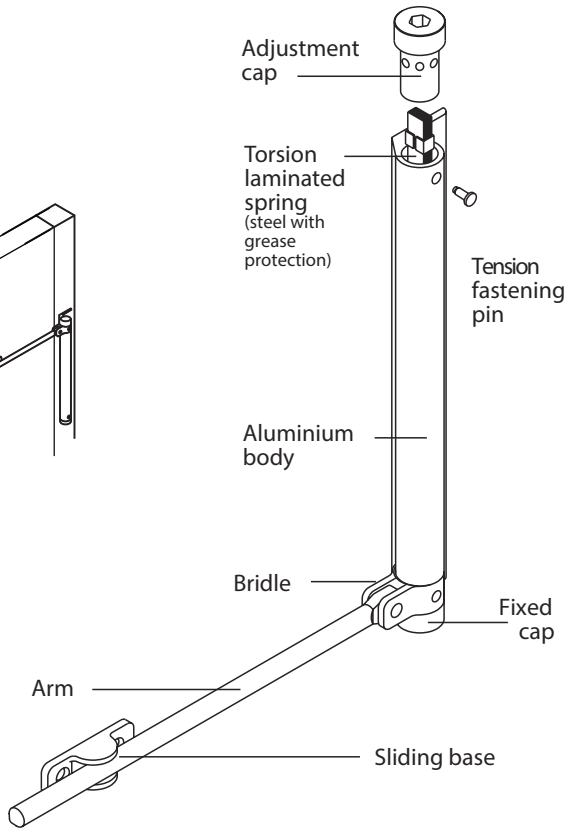

Order codes:

- BIMBS - Silver
- BIMBB - Bronze
- BIMBG - Gold

Retaining brake range technical data
Aluminium & stainless steel



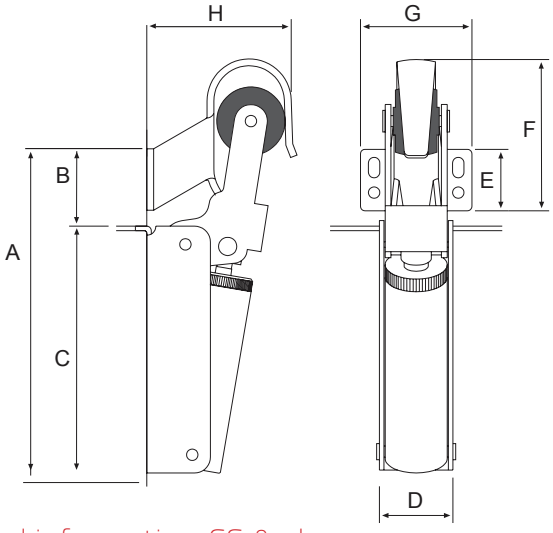

Dimensional information: SS & alum

Mod.	Force (N)	D/Width	D/Kg	A	B	C	D	E	F	G	H
BI0G	30 N	75cm	15	183,5	75	108,5	32	27	65,5	49	64
BI1G	60 N	85cm	40								
BI2G	80 N	110cm	80	200	75	125	36				
BI3G	115 N	125cm	100								

0G & 1G for interior and light doors
2G for doors with a lot of use
3G for heavy doors

Measurements Table (in mm)
D = Door

Retaining brake 0G, 1G, 2G & 3G anti-door slammer

Aluminium & stainless steel



The 0G, 1G, 2G and 3G range of retaining brakes are an ideal solution for all door types where the possibility of door slamming exists.

Ideal for low to extreme traffic environments, modest to extreme weather conditions, internal or external doors including light weight to very heavy doors, the 0G, 1G, 2G and 3G range of retaining brakes are easily installed on all existing doors without having to dismantle the door.

Stocked in large quantities, the Justor 0G, 1G, 2G and 3G range retaining brakes have a speed regulator for detailed control of door closure speed; aesthetically pleasing to the eye, cost effective & highly functional, the *only* solution to consider for high wind environments.

All Justor Retaing Brakes are maintenance free - due to their unique construction, they are fully adjustable while the door is still hanging and do not require periodic greasing or recharging. The 0G, 1G, 2G and 3G range of retaining brakes silently engages in the last 10° of door swing closure to prevent slaming. Made in Spain By Justor, the 0G, 1G, 2G or 3G retaining brake is a unique solution for an age old problem of high wind and drafts slamming doors.

Quick facts:

- Eliminates possible door slams
- Hydraulic mechanism
- Silent mechanism
- For light or heavy doors
- Acts on the last 10° of closure
- Variable closing strength
- Detailed instructions included
- Available in silver, bronze & stainless steel
- Quick & simple installation without dismantling of door
- 2 year manufacturer's guarantee

AISI 304

Anatomy of a retaining brake:

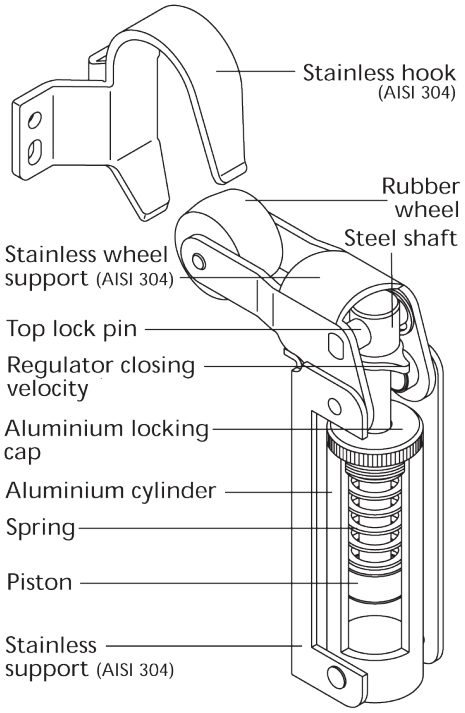

Ideal for sliding doors and gates. install it horizontaly & add sliding bracket "XGS1"

Order codes:

Base material: Aluminium

- BI0GS - Silver
- BI0GB - Bronze
- BI1GS - Silver
- BI1GB - Bronze
- BI2GS - Silver
- BI2GB - Bronze
- BI3GS - Silver
- BI3GB - Bronze

Base ,aterial: Stainless steel 304

- BI0GSS - AISI 304 stainless
- BI1GSS - AISI 304 stainless
- BI2GSS - AISI 304 stainless
- BI3GSS - AISI 304 stainless

Sliding door bracket

- XGS1 - Sliding backet

BIPGCR - Welding hinge

A welding hinge with a smooth opening and closing action due to using a bearing on the central axis instead of a washer. Using a bearing practically doubles the hinges capacity.

Made of steel or stainless steel. High load capacity, for doors up to 250kg in weight. Components are manufactured in stainless steel AISI 304 and AISI 316, offering high corrosion resistance.

Usesed on gates, fences, furnaces, private gardens, doors of industrial lifts, exterior architecture in stainless steel, Auxiliary doors, garage doors, pre-access doors, heavy duty doors, security doors.






BIPG240 updated to carry 250Kg

BIPGCR welding spring hinge

For welding onto steel jambs and frames

Bellevue is proud to introduce the Justor spring hinge range of welding hinges designed to automatically close light to heavy steel framed doors and metal gates that weigh up to 250kg. The Justor BIPG120, BIPG180CR, BIPG240CR welding spring hinges are sleek, stylish and simple. Made in Spain by Justor to exacting European standards, these models are adjustable torsion based spring hinges.

Due to its unique construction, the BIPG range, made of steel is fully adjustable while the door is still hanging. The BIPG range can be used on internal or external steel or metal-framed door jambs, gates and doors - whenever a gate/ door needs to close without assistance. Made in Spain By Justor, the BIPG range of welding hinges represent quality and innovation not normally seen in a product of this type. Optionally, the BIPG range can be powder coated or painted. Once done, it blends into any environment and surroundings.

Cost effective and highly functional, it is a real and effective alternative to traditional unsightly door closers and closing solutions. The BIPGCR range is a maintenance free solution - no periodic greasing or adjustments required, just 1 drop of oil in the top caps once a year. The BIPGCR spring hinge comes with a 2 year manufacturer's Guarantee.

Anatomy of a spring hinge:

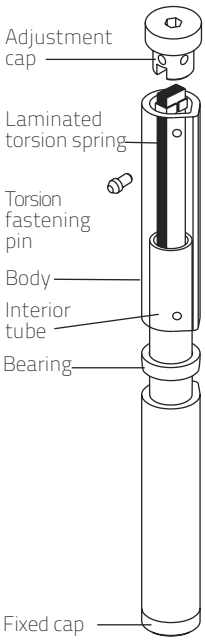

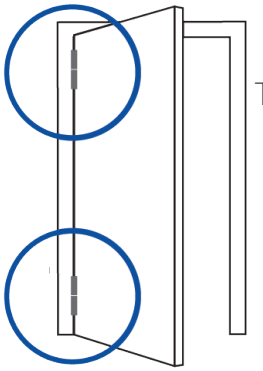

Three adjustment points

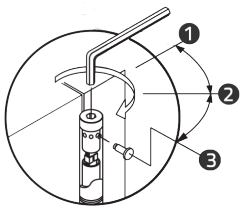

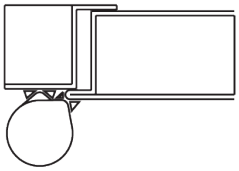



Technical data

For welding

Dimension & weight info:

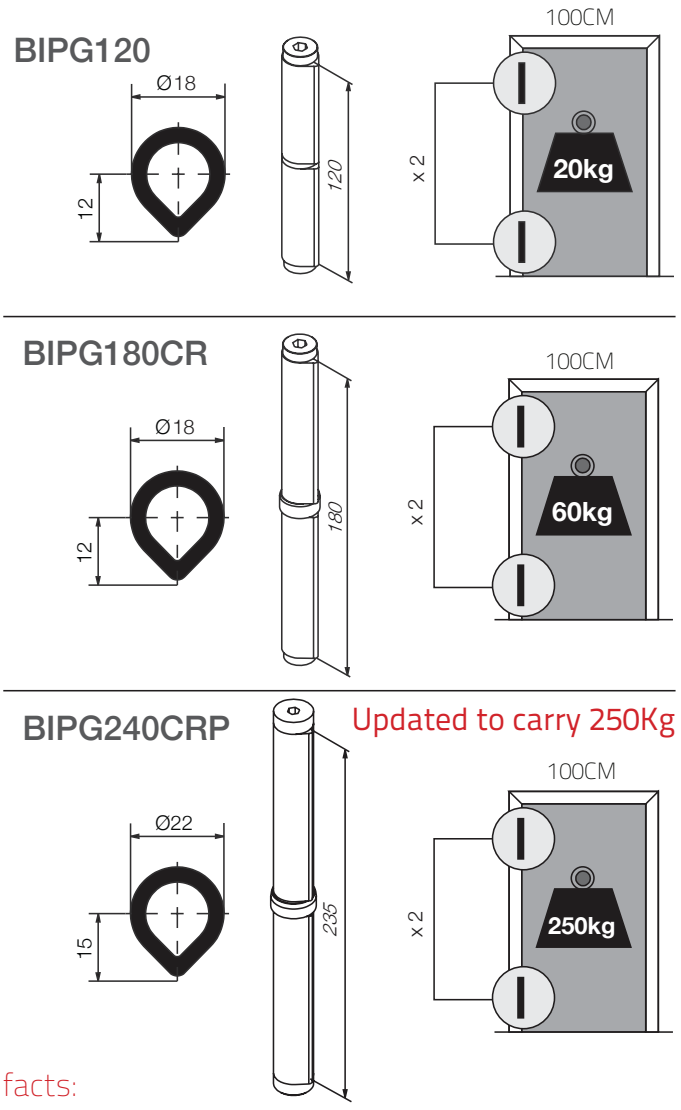

BIPG quick facts:

- Spring resistance 500,000 cycles
- Used in place of existing hinges
- Multiple sizes for different weights
- Up to 250kg in door weight
- Torsion spring not a coil spring
- Variable closing strength
- 90° or 180° working aperture
- Solid and stylish design
- For metal doors, gates and frames
- Ideal for internal or external use
- Slim profile
- 2 Year manufacturer's guarantee
- Made in Spain

Order codes:

- BIPG120 - 20kg
- BIPG180CR - 60kg
- BIPG240CRP - 250 kg

Non-sprung

- BIPGN120 - 20kg
- BIPGN180CR - 60kg
- BIPGN240CRP - 250 kg

Finish: Gun metal is a raw finish which can be powder coated or painted to specific colours.

BIPP - Welding push flap

The Justor BIPP push flap hinge is constructed with 2 steel profiles used in conjunction with exsisting hings. The upper profile pushes the door closed by pivoting on the washer which sits on the lower profile that is welded to the frame.

The spring in the BIPP pushes, but does not carry the weight of the door.

The BIPP has been used on warehouse doors, spray booths, livestock access, fencing access gates to name a few.



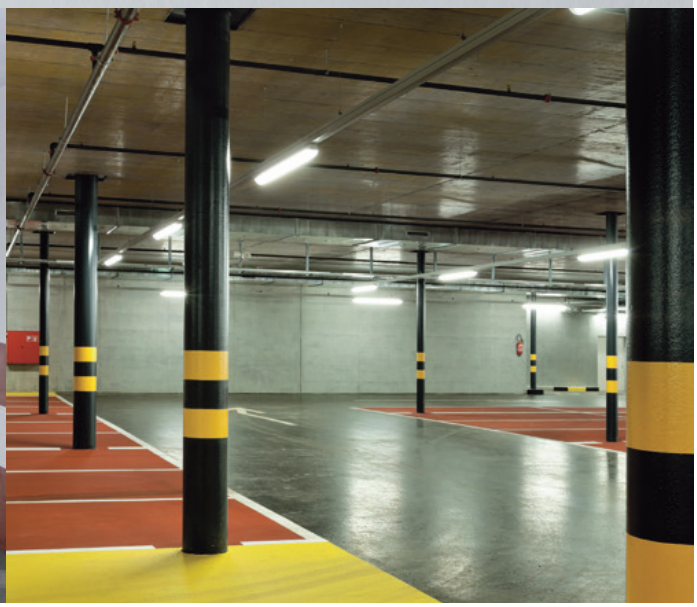

BIPP push flap welding spring hinge
For welding onto steel jambs and frames

The Justor BIPP push flap hinge is specifically designed for welding to gates and metal door jambs where existing hinges may already be in use. By adding the BIPP hinge, you will be able to automatically close light to heavy steel framed doors and metal gates that weigh up to 80kg. The Justor BIPP push flap welding spring hinges are sleek, stylish and simple. Made in Spain by Justor to exacting European standards; the BIPP push flap is adjustable without the need to take the door or gate down.

Made of steel, the BIPP push flap can be used on internal or external steel or metal-framed door jambs, and doors whenever a door needs to close without assistance. Made in Spain By Justor, the BIPP push flap represents quality and innovation not normally seen in a product of this type. Optionally, the BIPP hinge can be powder coated. Once done, it blends into any environment and surrounding.

Cost effective and highly functional, it is a real and effective alternative to traditional and unsightly door closers and closing solutions. The BIPP range is a maintenance free solution - no periodic greasing or adjustments required, just 1 drop of oil in the top caps once a year. The BIPP spring hinge comes with a 2 year manufacturer's Guarantee.

Anatomy of a spring hinge:

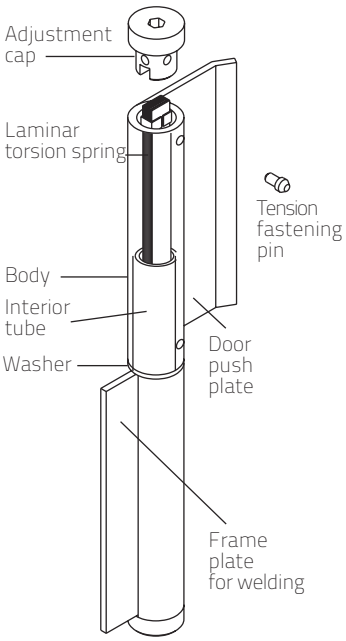



Technical data
for welding

Dimension & weight info:

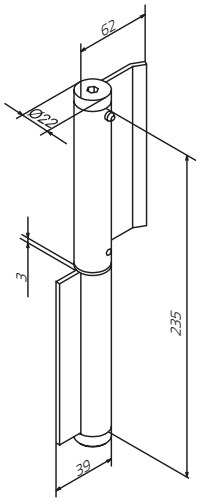

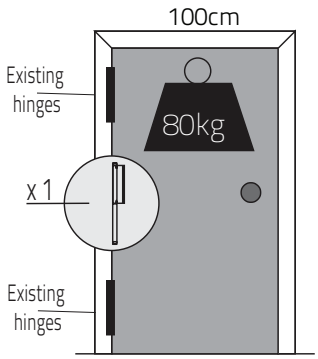

Used in conjunction with existing hinges

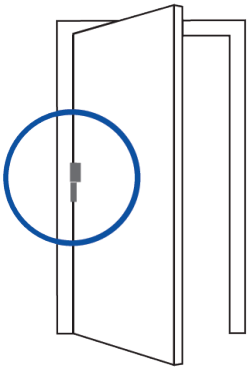

Three adjustment points

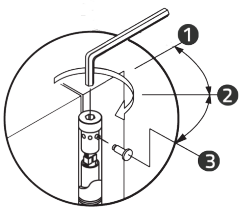

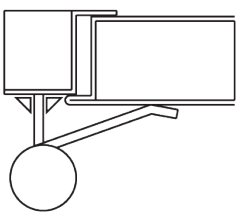

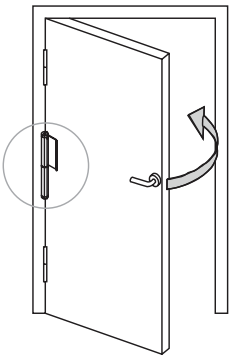

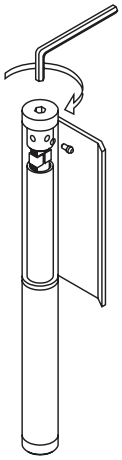

BIPP quick facts:

- Spring resistance 500,000 cycles
- Used with existing hinges
- Ideal to retrofit existing doors & gates
- Up to 80kg in door weight
- Torsion spring not a coil spring
- Variable closing strength
- Highly efficient 180° working aperture
- Solid and stylish design
- For metal doors, gates and frames
- Ideal for internal or external use
- 2 year manufacturer's guarantee
- Made in Spain
- Slim profile

Order Codes:

- BIPP - Gun metal - Push flap - 80kg

Finish: Gun metal is a raw finish which can be powder coated or painted to specific colours.

JUSTOR DATA SHEET OVERVIEW

	HINGES FAMILIES	IRON DA/SA PG/PP	ALUMINIUM DA/SA/ST MB/MP/PM/MZ	STAINLESS STEEL AISI 304 DA/SA/ST PG/PP	STAINLESS STEEL AISI 316 DA/SA	PLASTIC MZ
OUTSIDE	Blade	Steel	Aluminium	Stainless steel AISI 304	Stainless steel AISI 316	Polyamide 6+6 fibreglass
	Treatment	Galvanised	Anodized (10u - 15u)	Polished	Polished	-
	Adjustment cap	Sintered carbon steel	Zamac Cromado	Sintered AISI 316	Sintered AISI 316	Polyamide 6+6 fibreglass
	Pins	Steel galvanised	Steel galvanised	Stainless steel AISI 304	Stainless steel AISI 304	Steel cataphoresis
	Washers	Sintered carbon steel	Polyamide	Sintered AISI 316	Sintered AISI 316	-
INSIDE	Inner axle	Stainless steel AISI 304	Stainless steel AISI 304	Stainless steel AISI 304	Stainless steel AISI 316	Polyamide 6+6 fibreglass
	Inner spring	Carbon steel sheets set	Carbon steel sheets set	Stainless steel sheets AISI set 301	Stainless steel sheets AISI set 301	Stainless steel sheets AISI set 301
	Spring protection grease	Synthetic lytic temp. -45°C to 125°C	Synthetic lytic temp. -45°C to 125°C	Synthetic lytic temp. -45°C to 125°C	Synthetic lytic temp. -45°C to 125°C	Synthetic lytic temp. -45°C to 125°C
PERFORMANCE	Application	Suitable for indoor/ outdoor installation	Suitable for indoor/ outdoor installation	Suitable for indoor/ outdoor installation	Suitable for indoor/ outdoor installation	Suitable for indoor/ outdoor installation
	Automatic return power	Yes	Yes	Yes	Yes	Yes
	Adjustable return power	Yes	Yes	Yes	Yes	Yes
	Maximum door opening	180°	180°	180°	180°	180°
	Spring resistance	500,000 cycles	500,000 cycles	500,000 cycles	500,000 cycles	250,000 cycles

bellevuearch.com.au



Bellevue Architectural
954 Glen Huntly Road
Caulfield South
Vic 3161 Australia

www.bellevuearch.com.au
Ph: 03 9571 5666
info@bellevuearch.com.au

*Please note that all images in this document are used for illustrative purposes only.
Product specifications are subject to change without notice.